General description

The TOFcam-635 is a miniaturized and cost-optimized 3D TOF camera. It is based on the ESPROS proprietary time-of-flight (TOF) technology using the epc635 TOF chip. The camera controls the illumination and the imager chip to obtain distance and grayscale images.

The cameras are calibrated to provide accurate 3D depth images. By using the ROS driver from ESPROS, 3D point clouds in a world cartesian coordinate system are available.

The depth images are compensated against DRNU errors, modulation errors, ambient-light, temperature and reflectivity of the scene. Thanks to the high performance of the imager chip with the unique ambient-light suppression, the camera can be used in many cases under full sunlight conditions. The output of the TOFcam-635 is depth and grayscale images – allowing a variety of new applications, e.g. for mobile robotics. This module brings you right in front with the latest technology of 3D depth sensing. All the complex engineering and time consuming design tasks regarding optics, illumination and signal processing are already solved.

Features

- 160 x 60 pixels (9600 pixels)
- Field of view (FOV) of 50° x 19° (h x v)
- Distance measurement ranges on white target:
  Wide FOV: 0.1 ... 7.5 m, center beam (NFOV): 1.0 ... 15 m
- Measurement rate up to 50 TOF measurements per second
- Sun- and ambient-light tolerant up to 100 kLux
- Calibrated and compensated
- Temperature compensated
- Easy to use
- High speed serial interface UART 10 Mbit/s
- Low power consumption
- GUI for Windows and Mac
- ROS application for Linux
- Python library for Windows
- Software source code on request
- Customized versions possible

Applications

- Distance measurement from centimeters to a few meters
- Mobile robots, automatic vehicle guidance, collision avoidance
- Scanner for SLAM data acquisition in mobile robots
- People and object counting, in-cabin monitoring
- Door opening, machine controlling and safeguarding, IoT
- Gesture control (man-machine-interface)
- Object classification

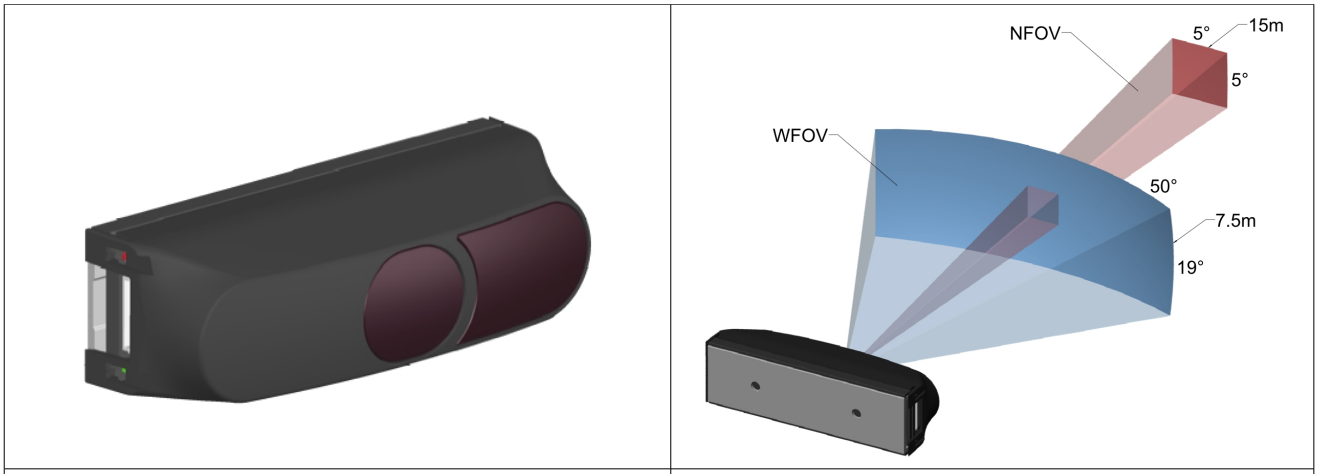

Figure 1: TOFcam-635

Figure 2: Wide and narrow field definition

© 2022 ESPROS Photonics Corporation
Characteristics subject to change without notice

Contents

1. Before you start 4
1.1. Precaution and Safety 4
1.2. Updates 4
1.3. Important Notes 4
2. Abbreviations 5
3. TOFcam-635 time of flight camera 7
3.1. System overview 7
3.2. Scope of delivery 7
3.3. Ordering information 8
3.4. Technical data 9
3.5. Mechanical data 10
3.5.1. Mechanical features 10
3.5.2. Mechanical dimensions 10
3.5.3. Mounting the camera 11
3.6. Camera connectors 12
3.7. Interface assembly variant 13
4. Start up 13
4.1. Power up with UART 13
4.2. System setup over USB 13
5. GUI 15
5.1. GUI main window 15
5.1.1. View menu 15
5.1.2. Play menu 18
5.1.3. Streaming files format description 18
5.1.4. Live image window 20
5.1.5. Point cloud 20
5.1.6. Dedicated information windows 28
5.2. I/O Control 29
5.3. COM port settings 30
5.4. Configurations menu 30
6. Operating the device with a ROS 32
6.1. ROS camera driver 32
6.1.1. What is ROS? 32
6.1.2. Installation 32
6.1.3. Running the ROS driver 32
6.2. ROS API 33
6.2.1. Test environment 33
6.2.2. Start of the node 33
6.2.3. Published topics 33
6.2.4. Dynamically reconfigurable parameters 34
7. Communication interface 35
7.1. Hardware interface 35
7.2. Software interface 35
7.3. Command format 36
7.4. Response format 36
7.5. CRC checksum 36
7.6. Acknowledge ACK (response) 37
7.7. Error handling 37
8. Command set overview 38
8.1. SET commands 38
8.2. GET commands 39
8.3. Miscellaneous commands 40
8.4. Factory maintenance commands 41
9. SET commands 42
9.1. SET_MOD_CHANNEL [0x0E] 42
9.2. SET_INT_TIME_DIST [0x00] 43
9.3. SET_INT_TIME_GS [0x01] 43
9.4. SET_OPERATION_MODE [0x04] 44
9.5. SET_HDR [0x0D] 44
9.6. SET_ROI [0x02] 45
9.7. SET_TEMPORAL_FILTER_WFOV [0x07] 45
9.8. SET_TEMPORAL_FILTER_NFOV [0x0F] 45
9.9. SET_AVERAGE_FILTER [0x0A] 46
9.10. SET_MEDIAN_FILTER [0x0B] 46
9.11. SET_INTERFERENCE_DETECTION [0x11] 46

© 2022 ESPROS Photonics Corporation
Characteristics subject to change without notice

9.12. SET_EDGE_DETECTION [0x10] 47
9.13. SET_FRAME_RATE [0x0C] 47
9.14. SET_AMPLITUDE_LIMIT [0x09] 47
9.15. STOP_STREAM [0x28] 47
9.16. SET_COMPENSATION [0x55] 47
9.17. SET_ILLUMINATION_POWER [0x6C] 48
9.18. SET_DLL_STEP [0x06] 48
10. GET commands 49
10.1. Acquisition modes 49
10.2. Acquisition data output formats 49
10.3. Response header 50
10.4. Warm-up 52
10.5. GET_DIST [0x20] 53
10.6. GET_DIST_GS [0x29] 53
10.7. GET_DIST_AMPLITUDE [0x22] 53
10.8. GET_GS [0x24] 54
10.9. GET_DCS [0x25] 54
10.10. GET_CALIBRATION_INFO [0x57] 54
11. Miscellaneous commands 55
11.1. SET_OUTPUT [0x51] 55
11.2. GET_INPUT [0x52] 55
11.3. GET_TEMPERATURE [0x4A] 55
11.4. GET_TOFCOS_VERSION [0x49] 55
11.5. GET_CHIP_INFORMATION [0x48] 55
11.6. GET_PROD_DATE [0x50] 56
11.7. IDENTIFY [0x47] 56
11.8. GET_ERROR [0x53] 56
12. Factory maintenance commands 57
12.1. CALIBRATE_DRNU [0x41] 57
12.2. GET_CALIBRATION [0x43] 57
12.3. JUMP_TO_BOOTLOADER [0x44] 57
12.4. UPDATE_TOFCOS [0x45] 58
12.5. WRITE_CALIBRATION_DATA [0x4B] 58
12.6. SET_MOD_FREQUENCY [0x05] 58
12.7. SET_BINNING [0x03] 58
13. Update camera operating system TOFCOS 59
14. Maintenance and disposal 60
14.1. Maintenance 60
14.2. Disposal 60
15. Addendum 60
15.1. Related documents 60
15.2. Links 60
15.3. Licenses 60
16. IMPORTANT NOTICE 61

1. Before you start

1.1. Precaution and Safety

	This product is eye safe according to IEC62471-2013.
	The camera module is an electronic device. Handle it with the necessary ESD precaution.
	Over-voltage: Use only a power supply which correspond to the datasheet of the camera to avoid damage of the device or cause danger for humans.
	Cable-tripping: Place or mount the sensor on solid ground or fix it correctly on a solid support. Place cables carefully. Falling devices can be damaged or harm persons.
	The sensor comes with its own calibrated TOFCOS. Do not alter the TOFCOS without obeying the instructions herein.
	Take care that the lens surfaces of the camera. Never use any solvents, cleaners or mechanically abrasive towels or high pressure water to clean the sensor.
	Operate the device in compliance with the local EMC regulations.
	This camera is not a safety device. It may not be used in safety applications, explosive atmospheres or in radioactive environment, except the user implements the required safety measures, e.g. by redundancy. However, the sole responsibility for the safety of the application is by the user.
	LIMITED WARRANTY - LOSS OF WARRANTY This camera should only be installed and used by authorized persons. All instructions in this datasheet and in the related documents shall be followed and fully complied with. In addition, the installer and user is required to comply with all local laws and regulations. The installer and user is fully responsible for the safe use and operation of the system. It is the sole responsibility of the installer and the user to ensure that this product is used according to all applicable codes and standards, in order to ensure safe operation of the whole application. Any alteration to the devices by the buyer, installer or user may result in device damage or unsafe operating conditions. ESPROS Photonics AG is not responsible for any liability or warranty claim which results from such manipulation or disregarding of given operating instructions.
epc espros photonics corporation	ESPROS Photonics AG is an ISO 9001: 2015 certified company.
CE RoHS	This product is according to European Union standards and free of hazardous substances.

1.2. Updates

ESPROS Photonics is constantly striving to provide comprehensive and correct product information. Therefore, please check ESPROS' website regularly for updated versions of datasheets and documentations: www.espros.com

	Download the latest Flyer TOFcam-635.
	Download the latest Installation and Operation Manual of the TOFcam-635.
	Download and use the latest TOFCAM635_SW_Package. If there are any questions, please contact your ESPROS sales office or send an email to sales@espros.com.

1.3. Important Notes

Colored marking in text means “under consideration” and refers to not yet applicable or verified information.
Values and/or information are either estimates or show the applicable principle only.

2. Abbreviations

Designator	Description
3D	Three dimensional
ACK	Acknowledged
API	Application program interface
A/D	Analog to digital
Binning	Summation of a defined number of pixels. Binning can be done in the charge (analog) or in the digital domain
CMD	Command
CPU	Central Processing Unit
CRC	Cyclic redundancy check (checksum)
cwTOF	Continuous wave modulated time of flight
DCS	Differential correlation sample
DLL	Delay locked loop, controllable delay line
DRNU	Distance response non-uniformity: Distance error from pixel to pixel with a target at the same distance
EMC	Electromagnetic compatibility
EMI	Electromagnetic interference
ESD	Electrostatic discharge
FOV	Field of view
fps	Frame rate, number of images per second
Frame	One image
GND	Ground terminal, negative supply voltage
GS	Grayscale
GUI	Graphical user interface
HDR	High dynamic range
ID	Identifier
IN	Input terminal which is used to sense a high or low voltage
ISO	International organization for standardization
JEDEC	Joint electron device engineering council
LED	Light emitting diode used to illuminate the scenery or as indicator
LSB	Least significant bit / byte
LVTTL	Low voltage transistor transistor logic
MCU	Microcontroller Unit
MSB	Most significant bit / byte
NACK	Not acknowledged
NFOV	Narrow field of view
OUT	Output terminal which is can be set to high or low voltage
RMS	Root mean square
RoHS	Restriction of hazardous substances
ROI	Region of interest in the pixel-field
ROS	Robot operating system
RX	Receive terminal, data in
SLAM	Simultaneous localization and mapping
SW	Software
TBD / tbd	To be defined, information not yet available or not valid
TOF	Time of flight
TOFCOS	Time of flight camera operating system, firmware in the camera

Designator	Description
TTL	Transistor transistor logic
TX	Transmit terminal, data out
UART	Universal asynchronous receiver transmitter
USB	Universal Serial Bus
VDD	Positive supply voltage
WFOV	Wide field of view

Table 1: List of abbreviations used in this document

3. TOFcam-635 time of flight camera

3.1. System overview

The TOFcam-635 is a miniaturized and cost-optimized 3D TOF camera based on the ESPROS epc635 cwTOF imager chip with an integrated SLAM feature:

- 5VDC power supply input
- General purpose I/O connector
- STM32 ARM Cortex MCU
- The micro controller board communicates with the epc635 chip carrier board through an ultrafast TCMI serial interface.
- High performance TOF lens
- NIR band pass filter, AR coatings and stray-light suppression for optimal optical performance
- LED illumination adopted to the specific field of view
- LED illumination for narrow spot SLAM feature
- TOF camera operating system (TOFCOS) for camera control, distance calculation and filtering
- Communication by UART (standard) or USB (optional adapter required)
- Application programming interface (API) for further processing is available. It opens the world for point cloud computing, using open source tools or creating own customer applications.
- ROS device drivers for Linux available, Windows, Mac and Linux GUI available

3.2. Scope of delivery

Pieces	Part Name	Picture
1	Time of Flight Camera TOFcam-635 consisting of: – Designer housing with 2 IR windows – Aluminum base plate and heat sink – Receiver optic – Illumination cpl. – CPU electronics – Interfaces	
1	“Fix clip” Aluminum mounting plate	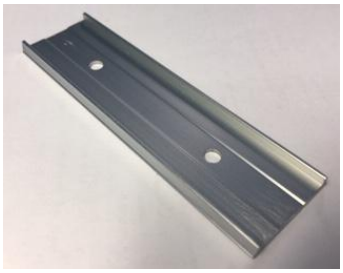
2	Self tapping screws for camera mount	
1	Software package containing GUI, ROS, Python API and current Firmware. Available on the ESPROS download page.	
1	Documentation (useful additional information available on the Espros download page)	

Table 2: Scope of delivery

3.3. Ordering information

Picture	Part No.	Name	Description
	P100 531	TOFcam-635	FoV 51° x 20°, 7.5m operating range (WFOW) FoV 5° x 5°, 15m operating range (NFOW)
	P100 539	Adapter Kit UART to USB	For TOFcam-635 - Adapter - Cable 2 x 10 pin F-F, L = 150mm - 2 Cables USB A – micro USB
	P100 610	Power supply 5VDC	Input 90 … 260V DC output 5V, 2A USB A receptacle
	P100 516	Cable 10 pin, F, 75mm JST 1.0mm, 28 AWG	Cable to connect a TOFcam-635 to a host
	P100 566	Cable 10 pin, F-F, 150mm JST 1.0mm, 28 AWG	Cable to connect a TOFcam-635 to the UART to USB adapter (included in P100 539)
	P300 473	Cable USB A to Micro USB	To connect the UART to USB adapter to a power supply and to a computer (2 x included in P100 539)
	P100 440	USB A extension cable, M-F, 2m	

Table 3: Order information for cameras and accessories

3.4. Technical data

All characteristics are at typical operational ratings, T_A = +25ºC, V_{DD} / V_{DDLED} = 5V, object reflectivity 90%, unless otherwise stated.

Parameter	Description	Conditions	Min.	Type	Max.	Units	Comments
V_{DD}	Main supply voltage	Ripple [1] < 50 mV_{pp}	4.75	5.0	5.25	V	
V_{DDLED}	LED supply voltage	Ripple [1] < 200 mV_{pp}	4.75	5	5.25	V	
I_{DD}	Main supply current	Acquisition		140		mA	
		Idle		100		mA	
I_{DDLED}	LED supply current	Acquisition		200 / 925		mA	RMS / Peak, @ VDDLED 5V, 30fps
		Idle		10		mA	@ VDDLED 5V
λ	Operating wavelength			850		nm	
RES_{IMAGE}	Image resolution			160 x 60		Pixel	
FOV	Field of view	WFOV		50 x 19		°	160x60 pixel
		NFOV		5 x 5		°	8x8 NFOV pixel
D	Operating range	WFOV	0.10		7.5	m	Depends on integration time
		NFOV	1		15	m	
$D_{Unabiguity}$	Unambiguity range [2]	WFOV		7.5		m	
		NFOV		15.0		m	
Acc	Accuracy	WFOV 0.1 … 2.0 m		± 4		cm	Mean of 100 samples
		WFOV 2.0 … 7.5 m		± 2		%	
		NFOV 3.0 ... 15.0 m		± 2		%	
D_{NOISE}	Distance noise (1σ value)	WFOV		0.1		mm	Amplitude 100 ... 1'900 LSB, Kalman Filter k = 10 and threshold t = 300 mm, ambient-light less than 10 kLux on target
		NFOV		0.1		mm	
t_{INT}	Integration time selectable		1		1000	µs	Default: 125µs
t_{CYCLE}	Measurement cycle time	GET_DIST GET_DIST_AMPLITUDE		50 72		ms ms	@t_{INT} = 125µs, single measurement, including data transmission
f_{MOD}	Modulation frequency	WFOV	19.20	20.00	20.70	MHz	Refer to Chapters 9.1 and 5.1.1
		NFOV	9.60	10.00	10.35	MHz	
t_{PWR_UP}	Power up time until acceptance of commands				1.5	s	
t_{WARM_UP}	Warm-up time until output data is in tolerance		Refer to Chapter 10.4				
$RES_{DISTANCE}$	Distance measurement resolution			1		mm/LSB	Refer to Chapter 10.
Φ_{AL}	Ambient-light suppression			100		kLux	Indirect, on target
$E_{e\ PEAK}$	Peak illumination irradiance				372	W/m^2	With 200mm distance to the front surface of the camera
$E_{e\ AVG}$	Average illumination irradiance			108		W/m^2	With 200mm distance to the front surface of the camera
V_{OUT}	OUT1 / OUT2 voltage drive capability				36	V	Refer to Figure 9
I_{OUT}	OUT1 / OUT2 current sink capability				50	mA	Over-current protected
V_{IN}	IN input voltage	logic low	0		0.8	V	Input resistance 100kΩ, refer to Figure 8
		logic high	3.0		30	V	
T_A	Ambient temperature range		-20		60	°C	Operation and storage
RH	Relative humidity		15		90	%	Non-condensing
W	Weight			43		g	Without cable
ESD	Electrostatic discharge rating		JEDEC HBM class 1C (1kV to < 2kV)				Human body model
EMC / EMI	EMC emission		EN 61000-6-3:2011, EN 61000-6-2:2005				
	Eye safety		IEC62471:2013				

Table 4: Technical data

Notes:

[1] Min. and Max. voltage values include noise and ripple voltage

[2] The camera uses the continuous-wave TOF phase-shift measurement technique with a modulation frequency of 10MHz (NFOV) and 20MHz (WFOV). This leads to unambiguity distances of 15m and 7.5m respectively. Highly reflective objects outside of the effective operating range of 15 / 7.5m will appear closer due to the wrap-around of the modulation period.

3.5. Mechanical data

3.5.1. Mechanical features

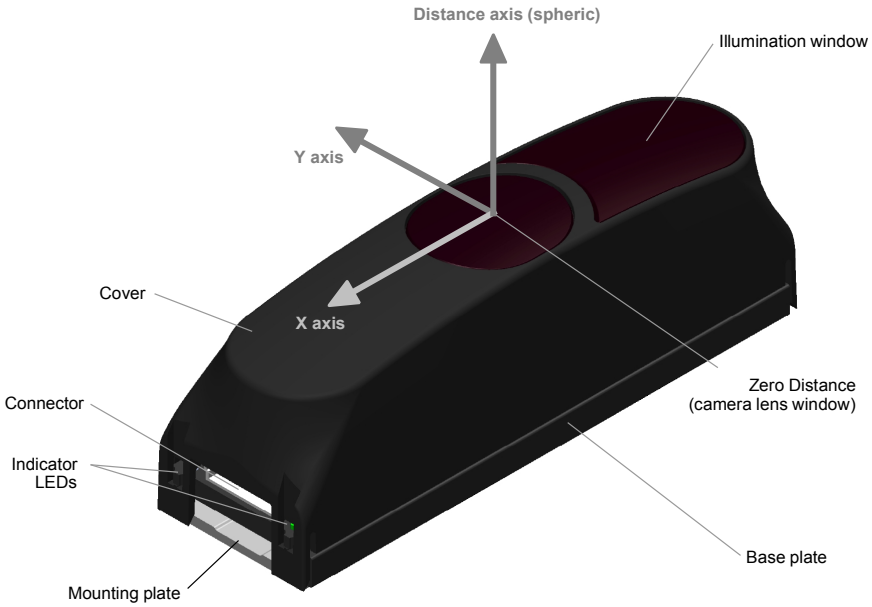

Figure 3: Mechanical features

The distance measurement starts from the front window of the housing with distance value 0mm. The mounting plate contains 2 holes with a diameter of 3.6mm for mounting. Use only these mounting points. Use the screws included in the scope of delivery. A maximum height of 2.8mm is allowed for the screw head. Because the mounting plate is also a heat sink for the illumination LEDs, it should not be covered by thermal insulating material. Free air flow shall be provided at any time in order to avoid excessive heat of the camera. The camera temperature can be monitored by reading the temperature with the command GET_TEMPERATURE (refer to Chapter 11.3) or using the GUI respectively (refer to Figure 25)

3.5.2. Mechanical dimensions

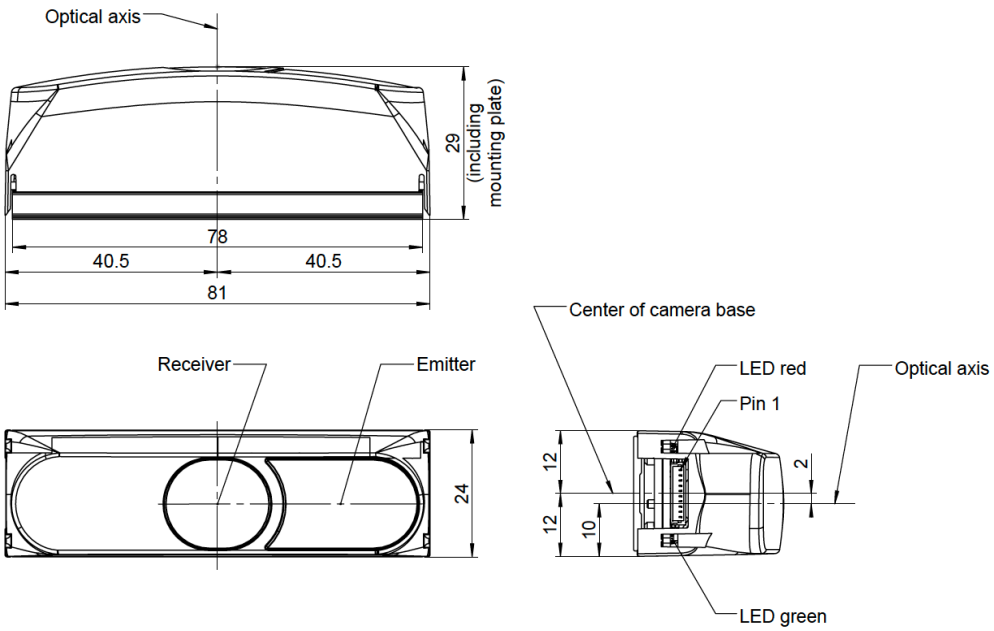

Figure 4: Mechanical dimensions

3.5.3. Mounting the camera

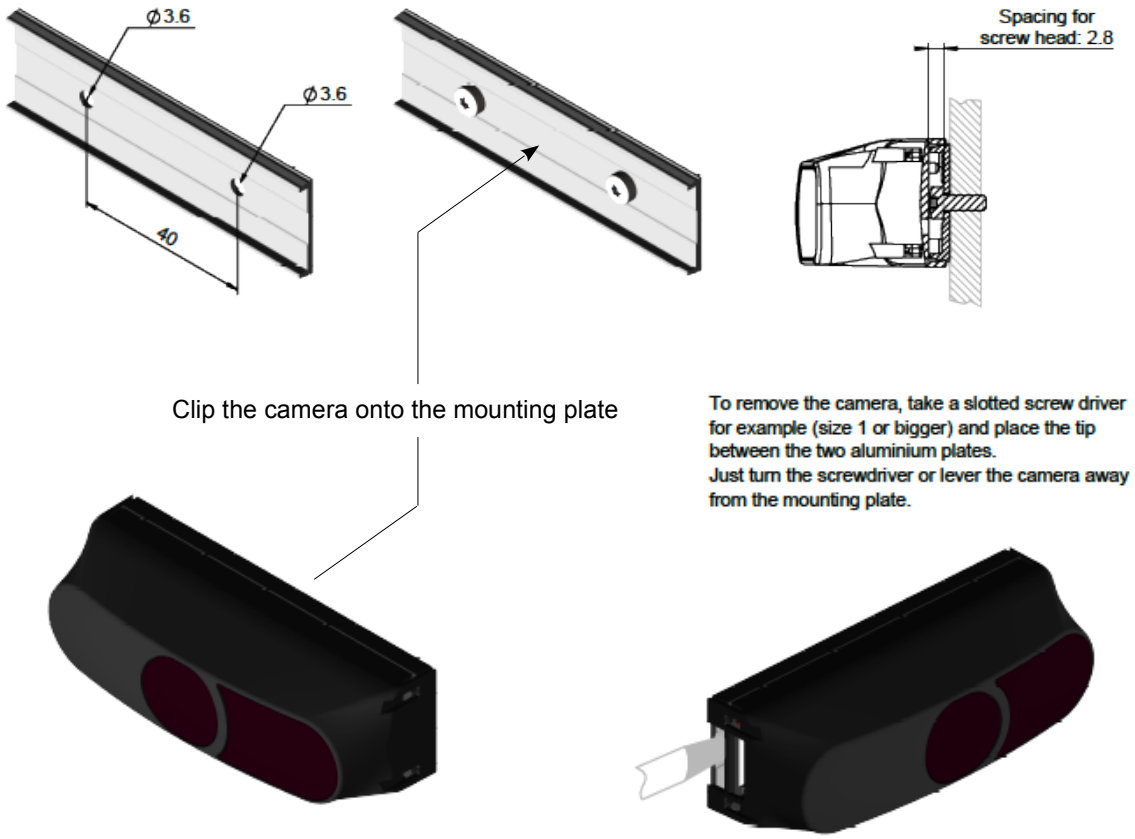

Figure 5: Mounting and dismounting the TOFcam-635

3.6. Camera connectors

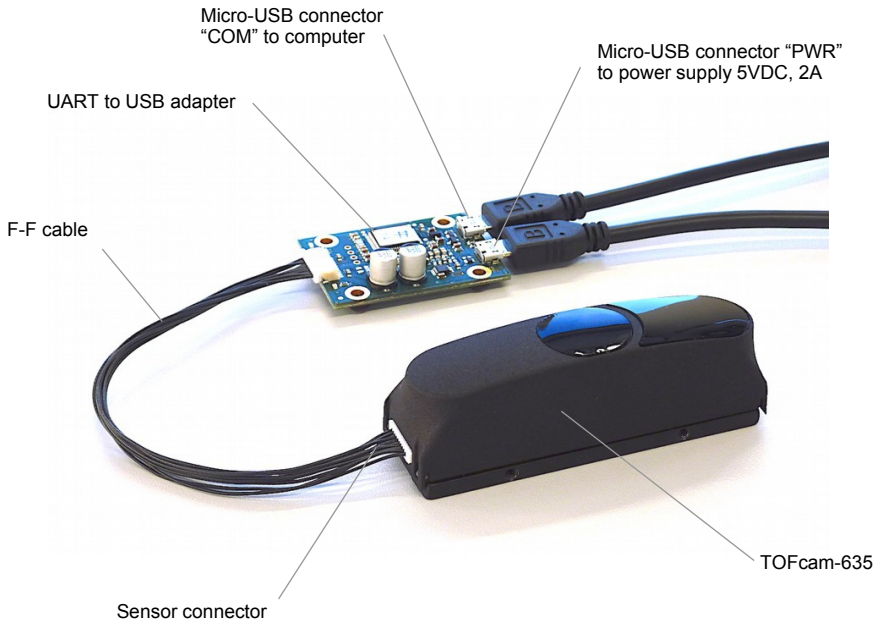

Figure 6: Camera connectors

Connector type:	JST SM10B-SRSS-TB
Matching plug:	JST SHR-10V-S-B or JST SHR-10V-S
Accessory:	A cable with one side plug and other side with cable leads is available. Refer to Chapter 3.3.

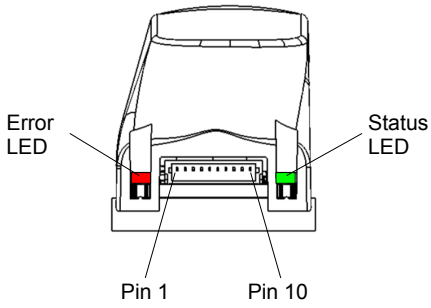

Figure 7: Interface view

Make sure to use the right plug and insert it properly to avoid damage of the device connector!

No.	Name	Function	Comments
1	VDD	VDD: +5V	Stable and free of noise power supply for the imager section. Decouple from pin 8/10.
2	GND	Negative supply terminal	Short with pin 9.
3	PIN3	OUT1	Open-drain output, refer to Chapters 11.1, SET_OUTPUT [0x51] , 5.2, SET_OUTPUT [0x51] and Figure 9.
4	PIN4	OUT2	
5	PIN5	IN	Digital input, refer to Chapters 11.2, GET_INPUT [0x52] and 5.2, SET_OUTPUT [0x51] .
6	UART_TX	Data output Tx	Data interface, refer to Chapter 7.
7	UART_RX	Data input Rx	
8	VDDLED	VDD_{LED}: +5V	Supply pin for illumination circuitry. Short with pin 10.
9	GND	Negative supply terminal	Short with pin 2.
10	VDDLED	VDD_{LED}: +5V	Supply pin for illumination circuitry. Short with pin 8.

Table 5: Pin table

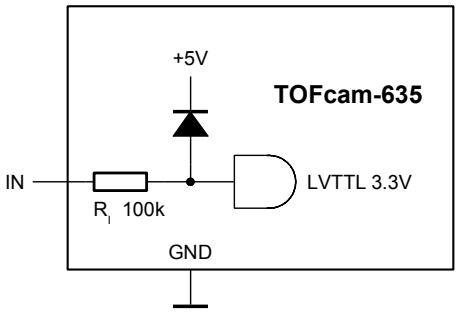

Figure 8: Input pin IN

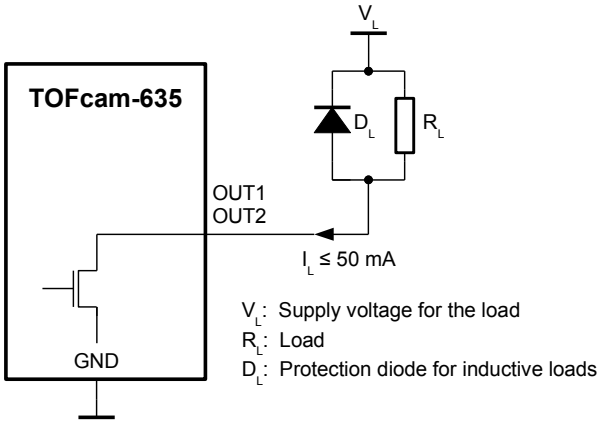

Figure 9: Output pins OUT1 and OUT2

3.7. Interface assembly variant

As an assembly variant it would be possible to replace the UART by an RS-485 interface. The connector according to Figure 7 and the pinning according to Table 5 keeps the same.

For additional information please contact your ESPROS sales office or send an email to sales@espros.com.

4. Start up

4.1. Power up with UART

Apply power on VDD and VDDLED. The sequence does not matter. The device notifies the power-up with a short red LED flash (Error LED). It is ready to operate as soon as the green status LED is on. Refer to Figure 7.

Error cases:

- Red error LED periodically short flashing: Firmware not or not correctly downloaded. Download the firmware with the GUI of TOFcam-635 or with the bootloader (refer to Chapter Fehler: Referenz nicht gefunden and 13).
- Red error LED slow flashing (0.5Hz), green LED off: Error during boot-up. Switch power off/on again.
- Red error LED stays on: Error during operation. Read-out the error number or fix the problem which caused the error.
- Red error LED fast flashing (2Hz): FW-update
- If the error remains, contact your sales responsible.



Make sure that the power supply has the correct voltage and is capable to deliver the required current. Please note that there is a surge current draw by the camera during power up. Also during image acquisition, pulse currents are drawn by the camera. A voltage drop due to surge currents shall be avoided by placing a big enough block capacitor nearby the power supply terminals.

4.2. System setup over USB

Using the optional UART to USB adapter allows a direct connection of the camera to a computer using the micro USB port indicated with “COM”. To properly drive the camera the adapter needs an additional connection to an external 5VDC power supply with minimum 2A using the micro USB port indicated with “PWR”.

The TOFcam-635 runs at 10 Mbit/s on the UART interface. Means, the USB adapter has to run this baud rate also on his UART port to communicate with the camera. Thus, the TOFcam-635 GUI sets automatically host's corresponding COM Port to 10 Mbit/s.

1. Connect the TOFcam-635 to plug J2 of the USB adapter (TOFcam-635). Refer to Figure 10.
2. Connect a USB power supply (min. 2.0 A) to the plug J1 of the USB adapter (Power Supply +5V / 2.0A). Power consumption depends on the frame rate, so in most cases you can use also a 2nd powerful USB port from the computer (e.g. USB 3.0 high-power: >0.9A) or a battery bank with USB port.
3. Connect your host computer to the plug J3 of the USB adapter (Host communication USB 2.0).

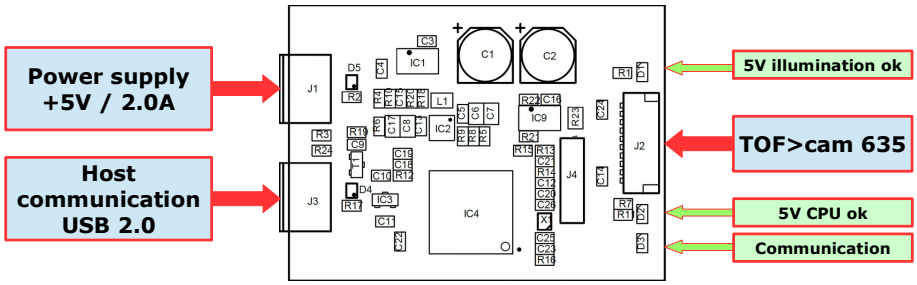

Figure 10: Cable connections (blue) and status LEDs (green)

4. Check if all 3 LEDs are on. Refer to Figure 10:
   - LED 5V illumination ok: ON when both USB ports are connected.
   - LED 5V CPU ok: ON when host communication USB is connected.
   - LED Communication: ON when host communication USB is connected and no communication, BLINKING when communication is in progress.
5. The device TOFcam-635 is recognized on the host as “STMicroelectronics Virtual COM Port”, automatically.
6. The TOFcam-635 is now ready to use.

5. GUI

First, before installation of a new software release, read the README and CHANGELOG files of the download package to get latest product information.

5.1. GUI main window

After starting the “TOFCAM635_GUI” application, the control window of the GUI appears. The software connects automatically to the device if a camera is physically connected to the computer. The connection is indicated in the status indicator line in the footer of the control window, the header shows the GUI version in use, the current firmware installed on the camera as well as the wafer and chip ID of the epc635 imager. The menu selection on the left side bar allows a user to step into the GUI control options.

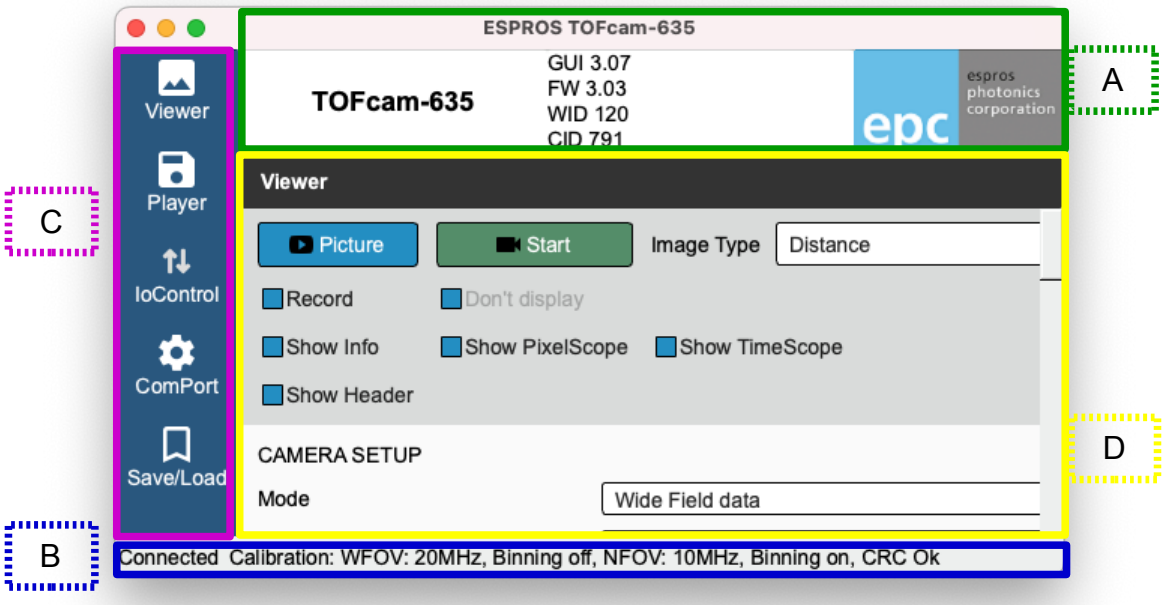

Figure 11: Sections of the GUI main screen

A) Camera type, GUI version, Firmware version, Chip-/Wafer-ID of the epc635 in the connected camera

B) Connection status:

C) Menu tab

Viewer	Chapter 5.1.1
Player	Chapter 5.1.2
IoControls	Chapter 5.2
COMPort	Chapter 5.3
Save/Load	Chapter 5.4

D) Controls for the selected menu tab

5.1.1. View menu

The View menu allows to control the camera and the camera output. Distance, amplitude and gray-scale images, DCS (raw data) or point clouds can be captured, streamed or recorded. Detailed information about pixel groups or one single pixel can be illustrated. For the whole GUI there are helpful tooltips available. These tooltips pop-up by moving the cursor either to the corresponding text (refer to Figure 13).

© 2022 ESPROS Photonics Corporation
Characteristics subject to change without notice

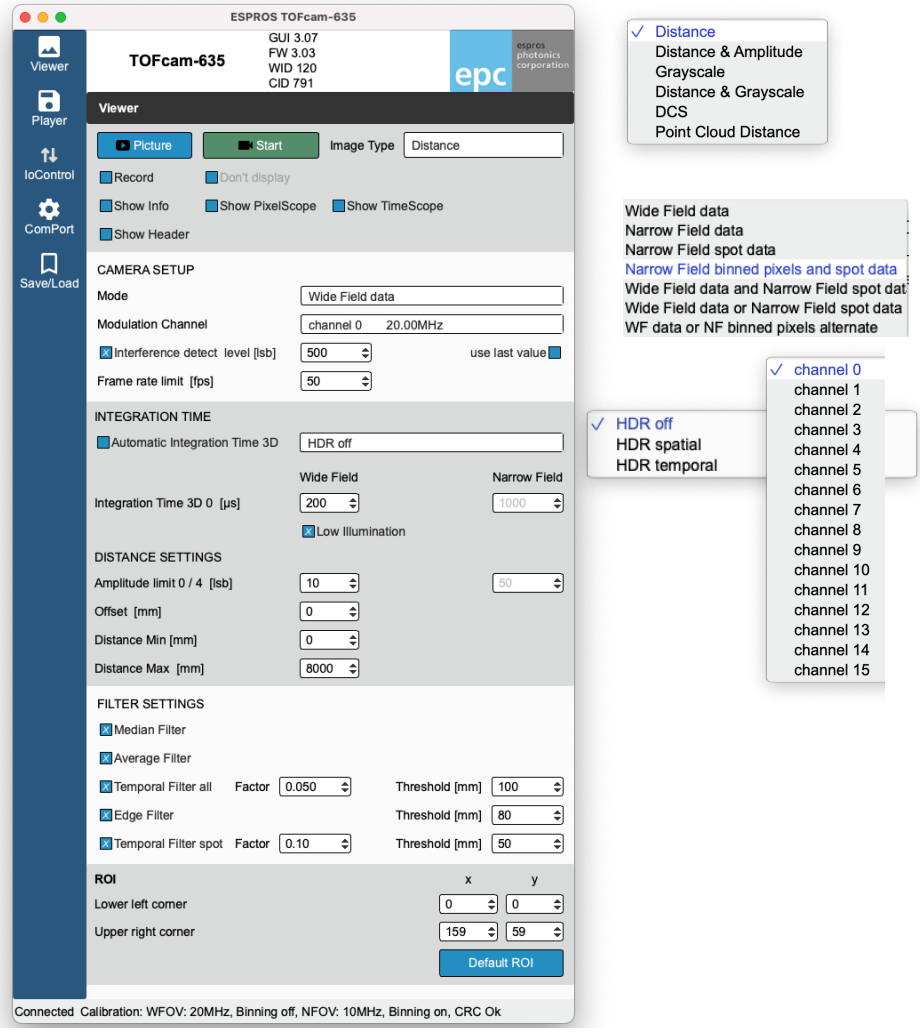

Figure 12: Camera controls

- “Picture“ and “Start“ open the “Image“ window according to the selection in the “Image Type” drop-down menu. Please see Chapter 5.1.4 to read the details about the live image window. The “Picture“ button acquires one single frame while the “Start“ button starts a live stream. It changes its look to “Stop“ which allows terminating the streaming.
- The “Record“ function allows to save picture data (one picture per push on the “Picture“ button) or live stream (from “Start“ to “Stop“ command each). On computers with low performance it might be helpful to enable the “Don't display” function to use all resources for recording the live stream. The recorded data contains all values according to the selected “Image Type“.
- The “Info”, “Scope” and “Header” check boxes open additional windows with dedicated information. You will find additional description about these functions in Chapter 5.1.6.
- In the “Mode” drop-down menu the acquisition mode is selected:
  - Wide Field data acquires with 20 MHz modulation frequency the full WFOW with 160 x 60 pixels if no additional region of interest (ROI) was selected. The wide field illumination is active.
  - Narrow field data acquires with 10 MHz modulation frequency the 8 x 8 center pixels only with active narrow beam illumination.
  - Spot data acquires one single distance value out of the acquired 8 x 8 center pixels
  - In binning modes a 2 x 2 binning is applied to the 8 x 8 center pixels.
- “Modulation channel” selection allows a shift of the modulation frequency from the main (default) modulation frequency. Multiple cameras operating in the same scenery (full or partially) with the same modulation frequency will interfere each other which leads to sporadically wrong distance information. This can be eliminated if the cameras do not use the same modulation frequency or channel respectively.
- “Interference detect” marks all interfered pixels within the set level. The “use last value” allows to overwrite interfered pixels with the distance and amplitude values out of last valid acquisition.
- With the “Frame rate limit” a specific frame rate can be set. This frame rate needs to be below the maximum possible frame rate at a specific camera setting.
- The “Automatic integration time” controls the integration time automatically depending on reflective objects in the illuminated scenery.

© 2022 ESPROS Photonics Corporation
Characteristics subject to change without notice

- “HDR off“ let's the camera operate with one integration time only.
- “HDR spatial“ operates all odd rows of the imager with the “Integration Time 3D low“ value and all even rows with the “Integration Time 3D medium“ value. This operation is only enabled for Wide Field data.
- “HDR temporal“ allows using up to 3 different integration time values (integration times with zero values are ignored). In this mode one complete image is acquired with each set integration time 3D low … high. After the acquisition of all frames, a new image is generated from the different frames by using the most confident value (pixel by pixel). Due to multiple image acquisitions, this mode reduces the frame rate.
- Integration time setting allows to define the exposure time to acquire the required Differential Correlation Samples (DCS) to calculate the distance for each pixel.
- “Low illumination” reduces the illumination power. This allow to operate the camera with adequate integration time even if high reflective objects are detected in very narrow distance range.
- A minimal amplitude can be set. This is the minimum received signal to provide distance. One should use low limits for object recognition but high limits for accurate distance measurements. Please investigate the TOF theory to become familiar with the physical context. A very helpful lecture might be the book “3D-TOF, A guideline to 3D-TOF sensors that work” by ESPROS Photonics Corp. (author Beat De Coi et. al.).
- An “Offset” moves the zero point for distance calculation away from the calibrated origin. Refer to Chapter 3.5.1
- “Distance min“ cuts off all pixels reporting a value below this setting. In addition, the color distance minimum scale is adjusted to this setting.
- “Distance max“ cuts off all pixels reporting a value beyond this setting. In addition, the color distance maximum scale is adjusted to this setting.
- The color scale visualizes distance of every pixel in the viewer. Dark red represents the shortest, dark blue the farthest distances.
- Various powerful filter functions are available with specific thresholds and filter factors. The algorithms behind are shown in corresponding tooltips.
- The ROI (region of interest) allows to reduce the readout of the pixel field. Only pixels within the selected ROI will be acquired. The “Default ROI” button resets the ROI to full imager size of 160 x 60 pixels.

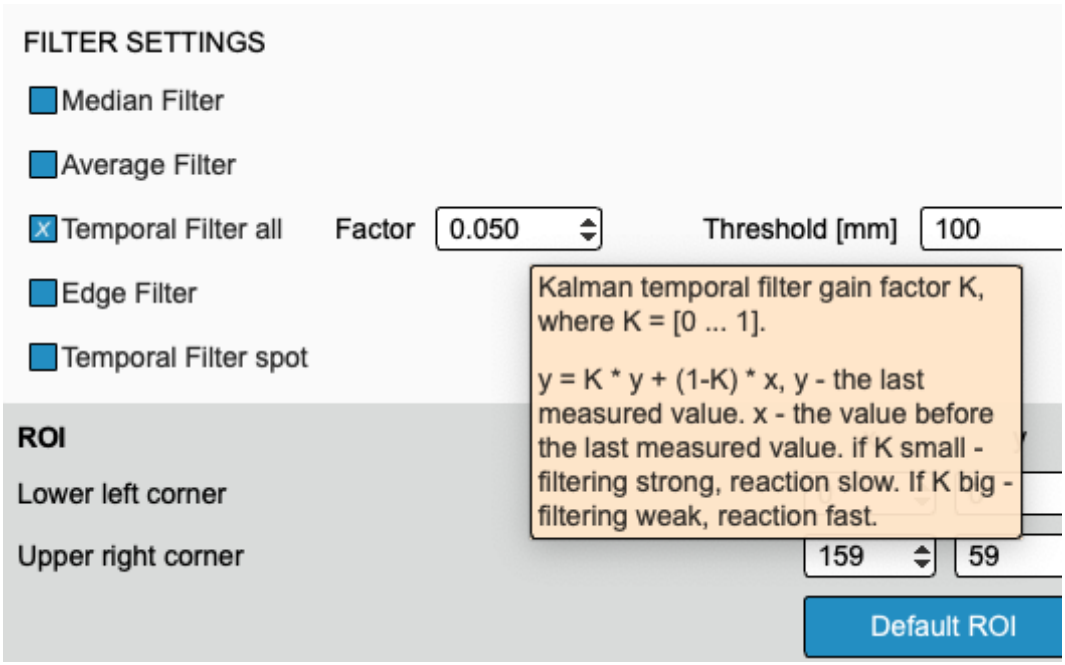

Figure 13: Tooltips example

5.1.2. Play menu

The “Play“ menu allows replaying the recorded streams. This is possible in slow motion, original speed or accelerated. A single frame can be searched and selected and the streamed data can be converted to point clouds. This functions of the GUI can be used even if no camera is connected.

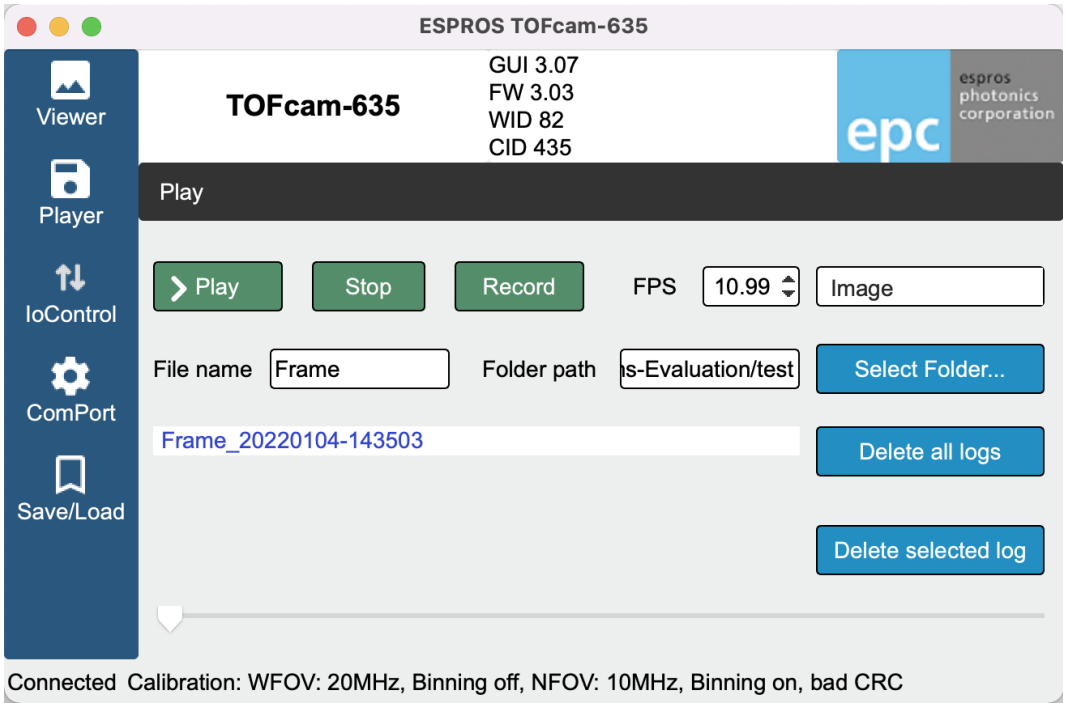

Figure 14: Player controls

- “Play” replays the selected stream with the set frame rate. After changing the selection or pushing the “Stop“ button the original frame rate of the recording is used. The “Start“ button changes its look to “Pause“ after been pushed. Selecting the “Pause“ button interrupts the playback and allows to continue from the same point.

  The player can replay the recorded data only with the parameters which has been set during the recording process. This includes also the “Image Type“ according to the “View“ menu.
- “Stop“ aborts the replay, resets the timer to zero and the frame rate to the recording frame rate.
- “Record“ streams images according to the parameters set in the “View” menu, refer to Chapter 5.1.1.
- “FPS” sets the acquisition frame rate (or the replay speed respectively). This value is reset by pressing the “Stop“ button or by changing the selected log in the list.
- “File name“ defines the file name of the log file. An “underline” character separates this name from the current calendar day followed by a “minus” separated time stamp.
- “Folder path” defines the log file location. This path can be changed either directly in the input field or with the “Select Folder” function.
- “Delete all logs“ will delete all logs in the selected folder. “Delete selected log“ deletes the selected log only. All deletions needs to be confirmed by the user.
- “Convert to PCD“ allows converting the recorded binary files to point cloud files which are compatible with point cloud applications such as “Cloud Compare“ or “Cloud Compare Viewer“. The converted 3D point cloud has a distance color coding or an amplitude color coding (“Convert to PCDA”).
- The slide bar in the bottom allows manual spooling of the stream forth and back.

5.1.3. Streaming files format description

Images are recorded in selected folder and consists of 2 type files:

A) index ASCII file – <file name>_<yyyymmdddd>-<hhmmss>.idx

B) binary data files – <file name>_<yyyymmdddd>-<hhmmss>-<index>.bin

Index .idx file contains binary file names in ASCII format.

Image .bin files contains image information in binary format, are using LittleEndian coding and consist of 3 parts:

1. Image header (80 bytes)

2. Data – ROI (width x height) * 2 or ROI (width x height) * 4 (2 bytes per pixel)
3. Additional recorder information (5 bytes)

Image header

VERSION	1 byte
FRAME_COUNTER	2 bytes
TIMESTAMP	2 bytes
FIRMWARE_VERSION	4 bytes
HARDWARE_VERSION	1 byte
CHIP_ID	2 bytes
WIDTH	2 bytes
HEIGHT	2 bytes
ORIGIN_X	2 bytes
ORIGIN_Y	2 bytes
CURRENT_INTEGRATION_TIME_3D_WF	2 bytes
CURRENT_INTEGRATION_TIME_3D_NF	2 bytes
CURRENT_INTEGRATION_TIME_GRAYSCALE	2 bytes
INTEGRATION_TIME_GRAYSCALE	2 bytes
INTEGRATION_TIME_0	2 bytes
INTEGRATION_TIME_1	2 bytes
INTEGRATION_TIME_2	2 bytes
INTEGRATION_TIME_3	2 bytes
INTEGRATION_TIME_4	2 bytes
INTEGRATION_TIME_5	2 bytes
INTERFERENCE_DETECTION_LEVEL	2 bytes
EDGE_DETECTION_THRESHOLD	2 bytes
AMPLITUDE_LIMIT_0	2 bytes
AMPLITUDE_LIMIT_1	2 bytes
AMPLITUDE_LIMIT_2	2 bytes
AMPLITUDE_LIMIT_3	2 bytes
AMPLITUDE_LIMIT_4	2 bytes
OFFSET	2 bytes
BINNING	1 byte
DISTANCE_TEMPORAL_FILTER_FACTOR	2 bytes
DISTANCE_TEMPORAL_FILTER_THRESHOLD	2 bytes
SINGLE_VALUE_TEMPORAL_FILTER_FACTOR	2 bytes
SINGLE_VALUE_TEMPORAL_FILTER_THRESHOLD	2 bytes
MODULATION_FREQUENCY	1 byte
MODULATION_CHANNEL	1 byte
FLAGS	2 bytes
TEMPERATURE	2 bytes
ILLUMINATION_BEAM	1 byte
BEAM_B_DISTANCE	2 bytes
BEAM_B_AMPLITUDE	2 bytes
BEAM_B_X	1 byte
BEAM_B_Y	1 byte
reserved	2 bytes

Data:

for distance image: (2 bytes) x width x height	2 bytes per pixel
for amplitude-distance image: (amplitude 2 bytes + distance 2 bytes) x width x height	4 bytes per pixel

Additional recorder information

image type	1 byte
beam mode	1 byte
time stamp byte	2 bytes
device	1 byte

5.1.4. Live image window

The “Image” window pops-up after a streaming, a replay or a recording has been started from the “View“ or the “Play“ menu. This window contains the images according to the selected “Image Type“. A recorded stream contains only the data which has been selected during the recording process (distance, amplitude, grayscale or DCS raw data).

With several controls the image can be adjusted to users needs: mirror and rotation functions to adjust the image according to the camera installation position and direction of view, region of interest and all info and scope functions with dedicated information as described in Chapter 5.1.6.

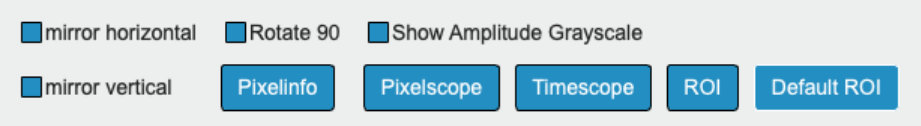

Figure 15: Live image controls

- “mirror horizontal“ flips the image horizontally.
- “mirror vertical“ flips the image vertically.
- “rotate 90°” rotates the image for 90°.
- The amplitude can be shown as color coded values (default) or as gray-scale.
- The scope functions allow to show some decided information about one single pixel or a selection of many pixels. A description about these information can be found in Chapter 5.1.6. The pixel selection can be deleted with right mouse click or by just doing a new selection.
- “ROI“ selects a region of interest by using the left mouse button. “Default ROI“ resets the ROI.

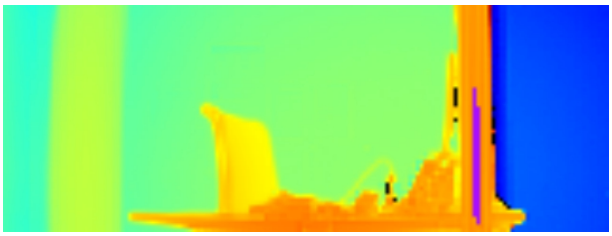

Figure 17: Image Type “Distance“



Figure 16: Image Type “Amplitude“



Figure 19: Image Type “Grayscale“



Figure 18: Amplitude as Grayscale

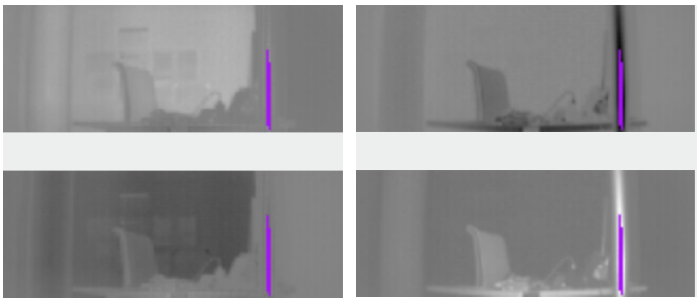

Figure 20: 4 DCS

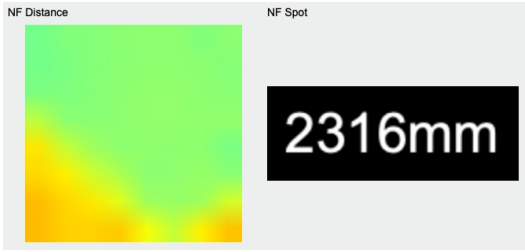

Figure 21: NFOV binned pixels and spot data

5.1.5. Point cloud

The “Point cloud” window pops-up after a streaming, a replay or a recording has been started from the “View“ or the “Play“ menu with image type “Point cloud“.

The point cloud can be adjusted according to the camera installation position and direction of view with the mirror and rotation functions. Using the control buttons for default, front, side and top view turns the point cloud into a well defined direction.

© 2022 ESPROS Photonics Corporation
Characteristics subject to change without notice

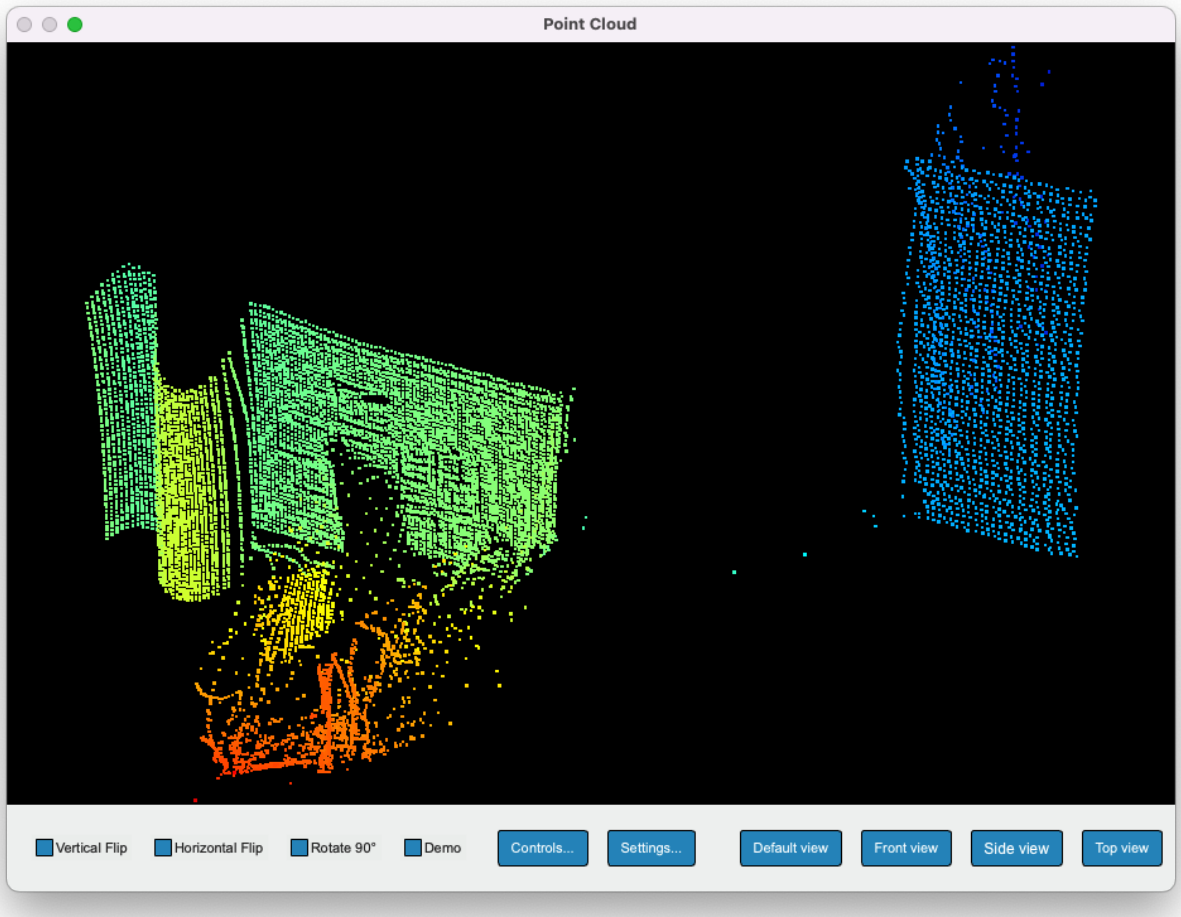

Figure 22: Point cloud window

Using keyboard and mouse allows further controls of the point cloud illustration. Activating the “Settings“ allows additional fine tuning of the point cloud visualization.

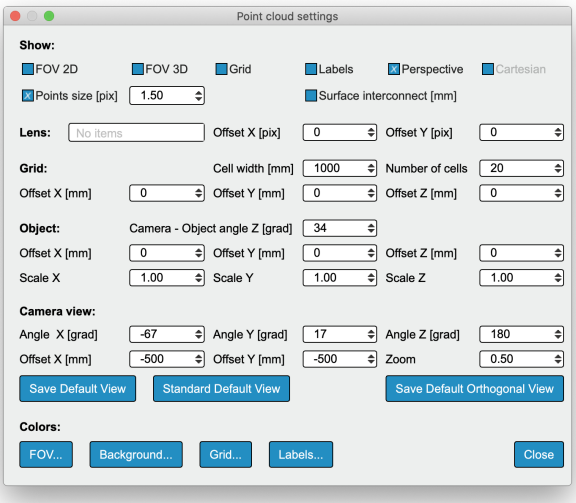

Figure 23: Point Cloud Settings

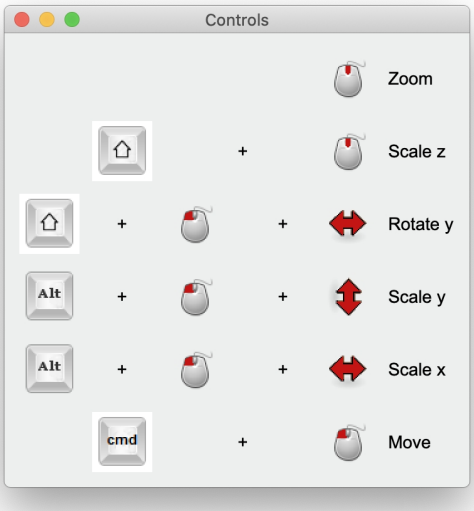

Figure 24: Point Cloud Controls

5.1.6. Dedicated information windows

Pixel data shows the distance values and confidence level of one selected pixel. Minimum, Maximum and Average values from the last 100 measurements as well as standard deviation are shown. Additionally the current frame rate and the chip temperature (temporally filtered) are indicated.

The pixel scope shows the current values of a selected row or an area of selected pixels where each column is indicated separately and all pixels per column are averaged.

The time scope is used to plot the chronologic distance and / or amplitude values of a single pixel or a averaged values of a selected area of the pixel field.

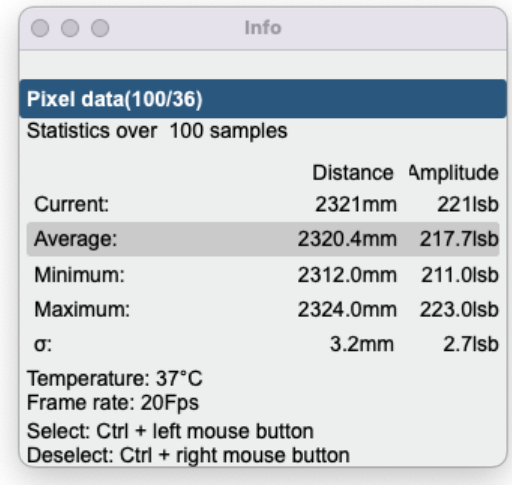

Figure 25: Pixelinfo

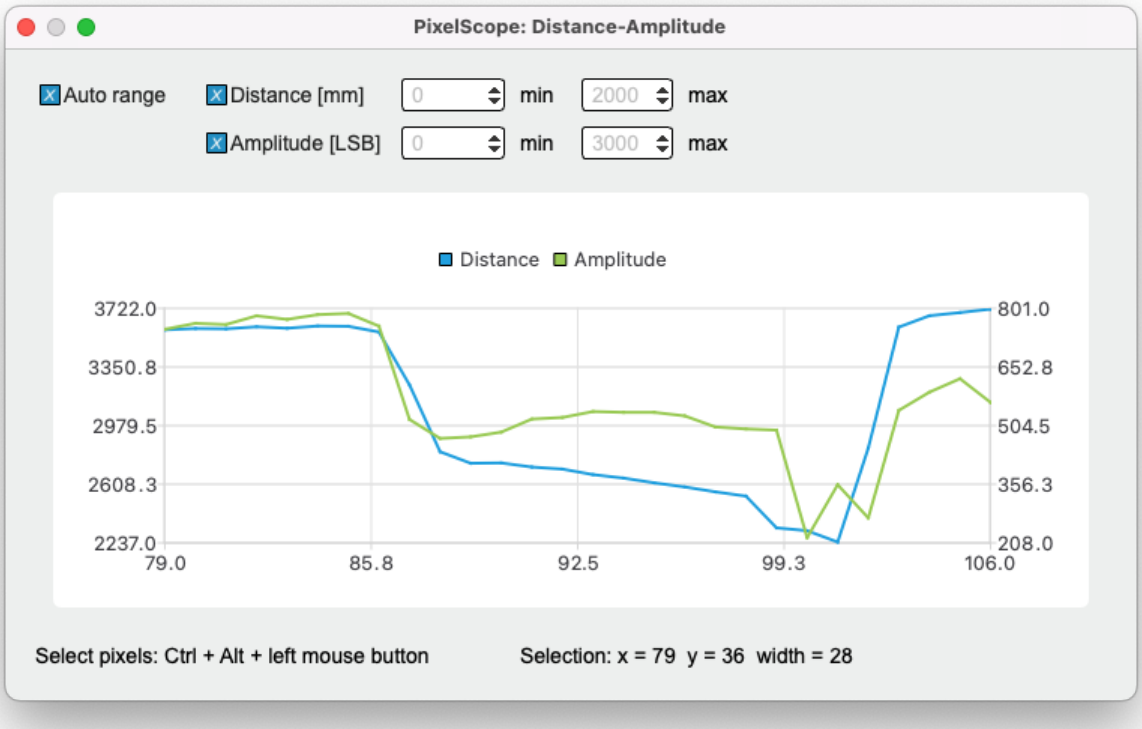

Figure 26: Pixelscope

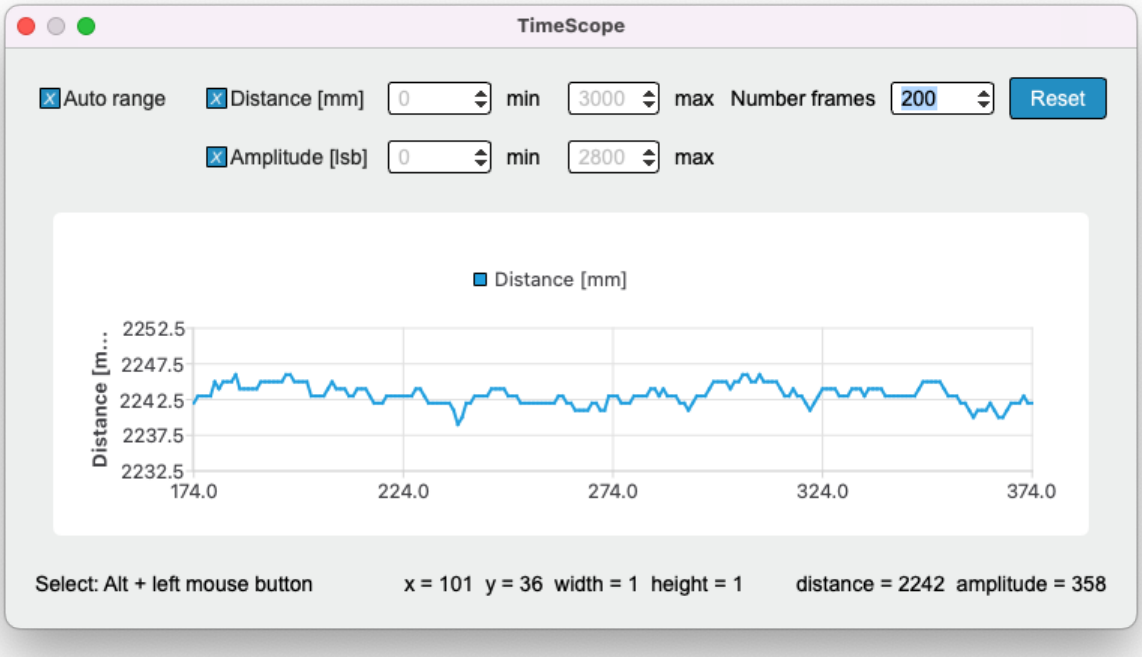

Figure 27: Timescope

5.2. I/O Control

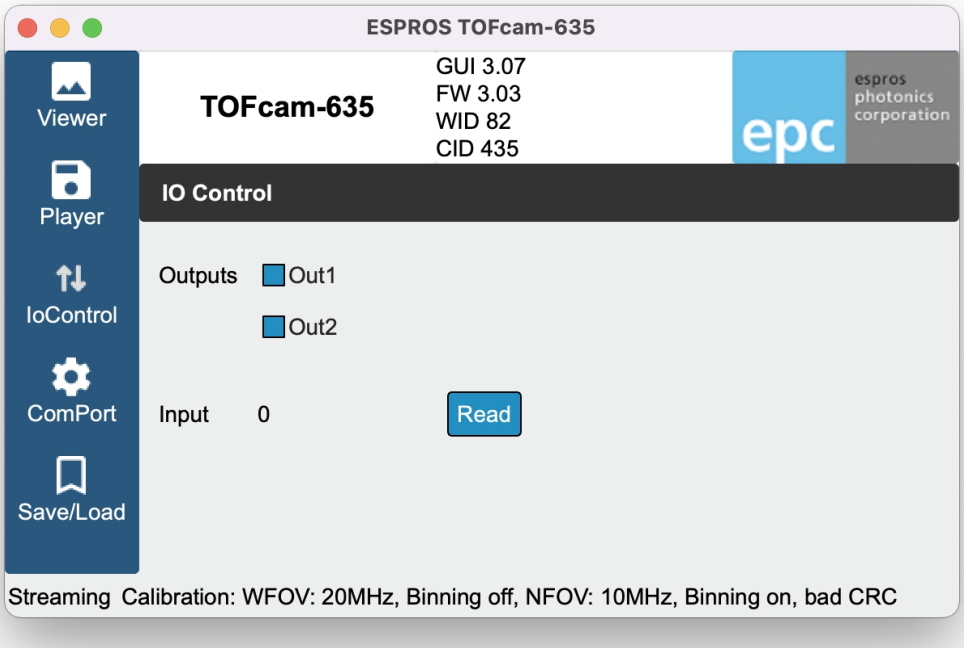

Figure 28: Input and output settings

5.3. COM port settings

The GUI allows to configure the baud rate of the used COM port. The firmware of the standard TOFcam-635 do not support this feature.

Do not change the baud rate with the standard TOFcam-635. This is a feature which is used for customized cameras only. A wrong setting can block the communication between your device and the host.

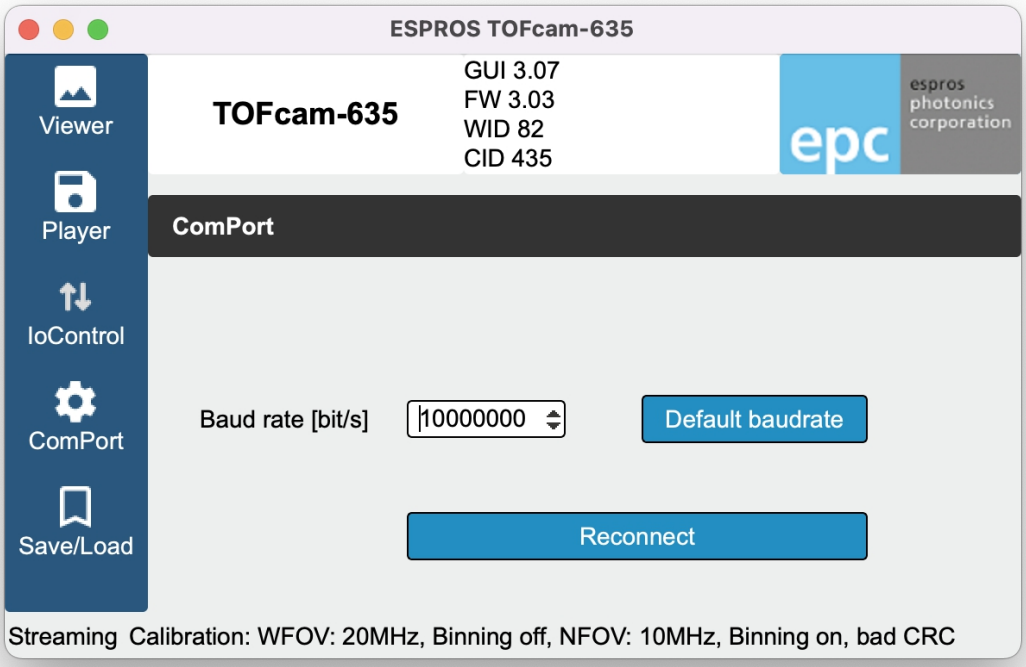

Figure 29: Baud rate configuration

5.4. Configurations menu

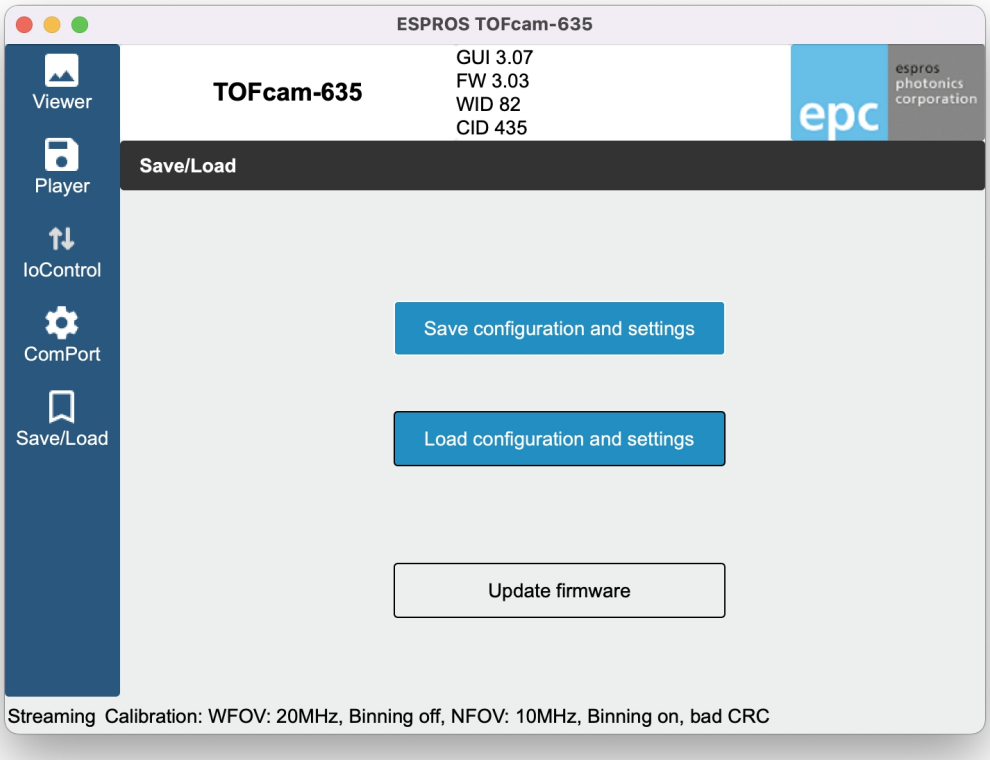

Figure 30: Save/Load and firmware update

“Save configuration and settings“ from the current camera application to a file.
“Load configuration and settings“ from a file stored on the PC into the camera application.

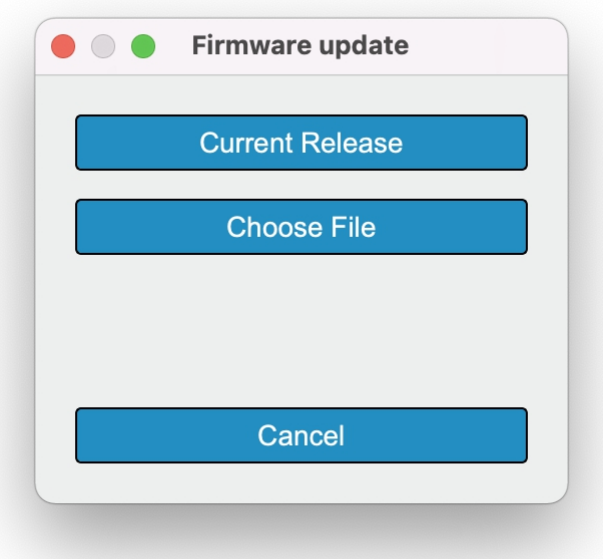

Figure 31: Firmware update

“Update firmware” allows to upgrade the firmware. One can choose the release according the published date of the GUI which is used. Or alternatively one can choose a specific binary file from a folder on the host computer.

6. Operating the device with a ROS

6.1. ROS camera driver

6.1.1. What is ROS?

The Robot Operating System (ROS) is a set of software libraries and tools that help you build robot applications. From drivers to state-of-the-art algorithms and with powerful developer tools, ROS has what is needed for a robotics project. It is all open source (Source: ROS.org). For more details, also refer to ROS.org and ROS Wiki sensors.

6.1.2. Installation

System requirement: Linux operating system.

Download the “TOFCAM635_SW_Package” from the website www.espros.com, section Downloads, 02_Cameras_and_Modules.

There is enclosed the “TOFCAM635_ROS_driver” file. Unpack this ZIP file.

6.1.3. Running the ROS driver

Change to the home directory and open the bash-file:

```
> cd ~
> gedit .bashrc
```

Insert the following line at the end of the bash-file:

```
Source ~/NameProjectDirectory/cam635_ROS_Driver/devel/setup.bash
```

Save the file and exit editor.

Start the ROS with GUI in terminal mode with the following command:

```
roslaunch espros_tof_cam635 camera.launch
```

The ROS tool opens with the different node windows and is ready to use.

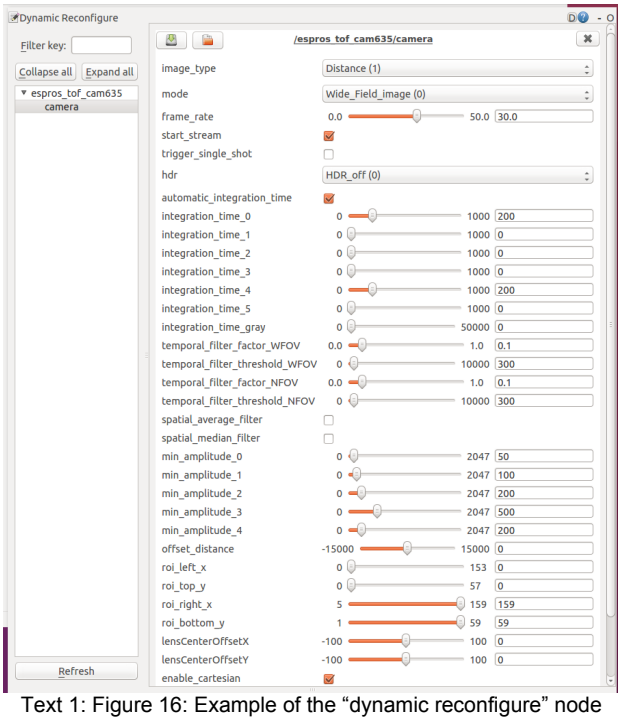

Text 1: Figure 16: Example of the “dynamic reconfigure” node window

Start the camera operation by changing in the menu the parameter “start_stream” from false to true.

6.2. ROS API

This is the official driver for the ESPROS TOFcam635. The annotation follows the rules of ROS.org.

6.2.1. Test environment

This ROS API was tested with these Linux & ROS configurations:

- Ubuntu 20.4 – Noetic
- Ubuntu 18.4 – Melodic
- Ubuntu 16.4 – Kinetic
- Ubuntu 20.4 – Noetic – Raspberry Pi 4 / 64 bit

6.2.2. Start of the node

If you use in terminal mode the APIs only, without GUI:
Start the ROS operating system in a Terminal1 with the command: `roscore`
Start the TOFcam635 in a Terminal2 with the command: `rosrun espros_tof_cam635 tof_cam635_node`

6.2.3. Published topics

Topic name	ROS msgs file	ROS message type	Function
camera/image_raw1	sensor_msgs	Image	Sends the grayscale or amplitude image according the selected image type parameter
camera/image_raw2	sensor_msgs	Image	Sends the distance image for image type parameters which include distance
camera/imageHeader	std_msg	Int32MultiArray	Sends the image header. Refer to Table 7.
camera/points	sensor_msgs	PointCloud2	Sends the point cloud image for image type parameters which include distance

Table 6: ESPROS ROS topics

Entry	Index	Entry	Index
Header version	1	reserved2	22
Frame counter	2	AmplitudeLimit0 WFOV	23
Timestamp	3	AmplitudeLimit1 WFOV	24
TOFCOS version	4	AmplitudeLimit2 WFOV	25
Hardware version	5	AmplitudeLimit3 WFOV	26
Chip ID	6	AmplitudeLimit4 NFOV	27
Image width (x-axis)	7	Binning type	29
Image height (y-axis)	8	DistanceTemporalFilter-Factor WFOV	30
Image origin X	9	DistanceTemporalFilter-Threshold WFOV	31
Image origin Y	10	SingleValueTemporalFilter-Factor NFOV	32
CurrentIntegrationTime3D WFOV	11	SingleValueTemporalFilter-Threshold NFOV	33
CurrentIntegrationTime3D NFOV	12	Modulation frequency	34
CurrentIntegrationTimeGrayscale	13	Modulation channel	35
IntegrationTimeGrayscale	14	Flags	36
IntegrationTime0 WFOV	15	Temperature	37
IntegrationTime1 WFOV	16	Illumination beam	38
IntegrationTime2 WFOV	17	NFOV distance	39
IntegrationTime3 WFOV	18	NFOV amplitude	40
IntegrationTime4 NFOV	19	reserved3	41
Integration time5 NFOV	20	n/a	n/a
reserved1	21	n/a	n/a

Table 7: Header parameters (see also notes below)

Notes:
■ For details and descriptions to the header parameters, refer to Chapter 10.3.
■ ROS header bytes: In total 164 bytes. Each parameter is transmitted in corresponding 32 bit data format (Int32MultiArray).

6.2.4. Dynamically reconfigurable parameters

Refer for details on the dynamically reconfigurable parameters to the enclosed “dynamic_reconfigure package” or to http://wiki.ros.org/dynamic_reconfigure.

Detailed descriptions of the parameter's functions are listed in Chapter 8 and following of this document.

Parameter	Function	Data format	Default	Reference
~image_type	Sets the image acquisition type 0: Grayscale 1: Distance 2: Distance and amplitude 3: Distance and grayscale	int	1	n/a
~mode	Sets the operation mode 0: WFOV 1: NFOV manual 2: NFOV result 3: NFOV result and image 4: WFOV and NFOV result 5: Either WFOV, if object is inside range, else NFOV spot. 6: WFOV and NFOV image	int	0	n/a
~frame_rate	Sets image acquisition frame rate. Range 0 ... 50 frame/sec	double	30	n/a
~start_stream	Enables image streaming	bool	False	n/a
~trigger_single_shot	Starts single measurement after change from false to true	bool	False	n/a
~hdr	Sets HDR mode: 0: HDR OFF 1: HDR spatial 2: HDR temporal	int	0	n/a
~automatic_integration_time	Automatic mode: Integration time is set automatically for WFOV and NFOV between 1 and 1'000 µs.	bool	True	n/a
~integration_time_0	Sets the WFOV integration time for distance measurements in microseconds. Range: 1 … 4'000 µs	int	200	n/a
~integration_time_1		int	0	
~integration_time_2		int	0	
~integration_time_3		int	0	
~integration_time_4	Sets the NFOV integration time for distance measurements in microseconds. Range: 1 … 4'000 µs	int	200	n/a
~integration_time_5		int	0	
~integration_time_gray	Sets the integration time for grayscale measurements in microseconds. Range: 0 … 50'000 µs	int	0	n/a
~temporal_filter_factor_WFOV	Sets the factor 'k' of the WFOV temporal filter (Kalman)	int	10	n/a
~temporal_filter_threshold_WFOV	Sets the threshold 'T' of the WFOV temporal filter (Kalman)	int	300	
~temporal_filter_factor_NFOV	Sets the factor 'k' of the NFOV temporal filter (Kalman)	int	10	n/a
~temporal_filter_threshold_NFOV	Sets the threshold 'T' of the NFOV temporal filter (Kalman)	int	300	
~spatial_average_filter	Enables the spatial average filter for distance filtering	bool	False	n/a
~spatial_median_filter	Enables the spatial median filter for distance filtering	bool	False	n/a
~min_amplitude_0	Sets the amplitude limits for WFOV. Range 0 … 2'047 LSB	int	50	n/a
~min_amplitude_1		int	100	
~min_amplitude_2		int	200	
~min_amplitude_3		int	500	
~min_amplitude_4	Sets the amplitude limits for NFOV. Range 0 … 2'047 LSB	int	200	n/a
~roi_left_x	Sets the left edge of the ROI	int	0	n/a
~roi_right_x	Sets the right edge of the ROI	int	159	n/a
~roi_top_y	Sets the top edge of the ROI	int	0	n/a
~roi_bottom_y	Sets the top edge of the ROI	int	59	n/a

Table 8: ROS parameter table

Parameter	Function	Data format	Default	Reference
~lensCenterOffsetX	Lens optical axis offset relative to sensor center (x direction). Range -100 … 100 pixels.	int	0	n/a
~lensCenterOffsetY	Lens optical axis offset relative to sensor center (y direction). Range -100 … 100 pixels.	int	0	n/a
~enable_cartesian	Enables point cloud cartesian transformation (false = spheric)	bool	True	n/a
~enable_images	Activates imagePublisher1 and imagePublisher2 nodes to send information (camera/image_raw1/2)	bool	True	Table 6
~enable_point_cloud	Activates pointCloud2Publisher node to send information (camera/points)	bool	True	Table 6
~enable_image_header	Activates imageHeader node to send information (camera/imageHeader)	bool	True	Table 6

Table 8 cont: ROS parameter table

7. Communication interface

7.1. Hardware interface

Communication takes place over a standard TTL UART interface. The communication protocol is as follows:

Parameter	Value	Unit	Comment
Baud rate	10	Mbit/s	1 bit = 0.1 µs
Start bits	1	Bit	low active
Data	8	Bit	
Stop bits	1	Bit	high active
Parity	No		
Voltage level LVTTL	3.3	V	

Table 9: UART configuration

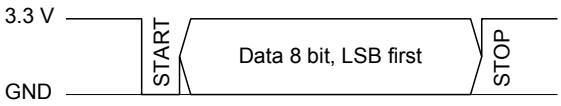

Figure 32: UART frame format

7.2. Software interface

The UART operates in a master-slave mode with the application as the master and the camera as the slave. A request is initiated with a command by the master. The camera as the slave returns the answer to the request after the processing time t_{PROC}. The camera does not accept commands during the processing t_{PROC} and the communication t_{COM_TX}. A next command can be issued earliest after finishing Data Out.

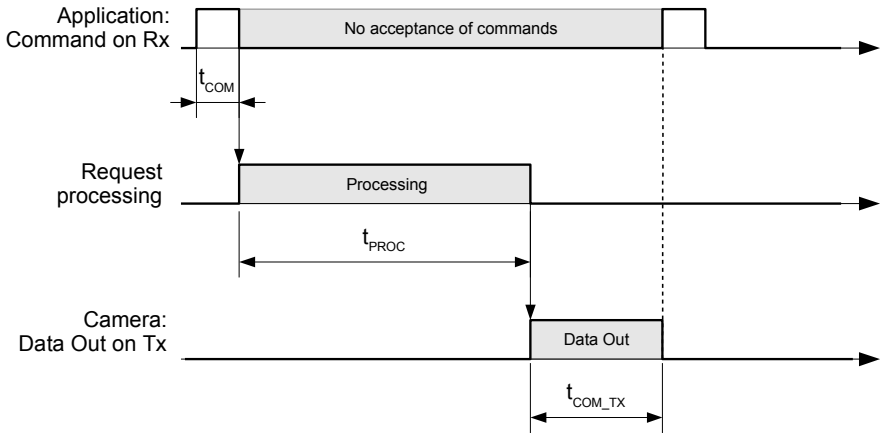

Figure 33: Command and answer sequence

Additionally, the camera has a streaming mode. The master starts the stream with a stream command. The camera continuously streams data to the master until the master stops the streaming by command. During streaming, the camera accepts commands to change parameters or to stop the stream.

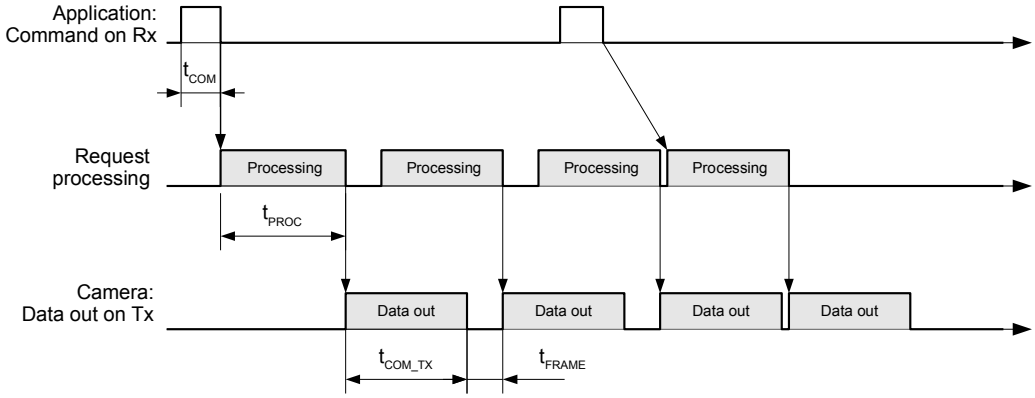

Figure 34: Streaming mode

7.3. Command format

The camera is operated by issuing commands on the UART interface UART_RX. The camera answers to each command with either the required data, acknowledge, not acknowledge or an error. LSB is transmitted first, MSB last.

Use the listed commands only, otherwise uncontrolled operation or TOFCOS deadlock can occur.

The command packet has a fixed length of 14 Bytes: A start byte (value 0xF5), followed by 1 byte command identifier (CMD), 8 bytes of parameters corresponding to the command and 4 closing bytes with a 32bit CRC.

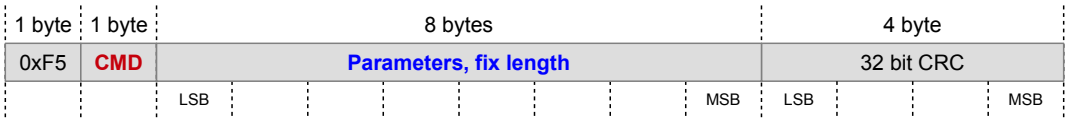

Figure 35: Command format

Note: Configuration settings applied by commands are stored as long as power is on or a new value is set.

7.4. Response format

The answer packet has variable length: A start byte (value 0xFA), followed by 1 byte type definition, 2 byte length definition n, n bytes data and 4 closing bytes with a 32bit CRC.

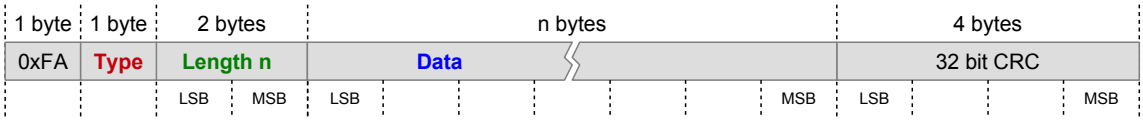

Figure 36: Response format

Note: The Readout order for pixel data starts at row 0, pixel 0 until end of row0 ... and ends with last row, last pixel.

7.5. CRC checksum

Data integrity is provided by a CRC checksum added to every camera response. The calculation of the CRC includes all bytes of the packet except the CRC itself. Examples are listed in the command list. The CRC specification is as follows:

- Byte-wise CRC32
- Polynomial: 0x04C11DB7
- Xor value: 0x00000000
- Init value: 0xFFFFFFFF

CRC calculation function:

```
uint32_t CrcCalc::calcCrc32_32(const uint8_t *data, const uint32_t size)
{
  uint32_t crc = initValue;
  for(uint32_t i = 0; i < size; i++)
  {
    crc = calcCrc32Uint32(crc, data[i]);
  }
  return crc ^ xorValue;
}


uint32_t CrcCalc::calcCrc32Uint32(uint32_t crc, uint32_t data)
{
  int32_t i;
  crc = crc ^ data;
  for(i=0; i<32; i++)
  {
    if (crc & 0x80000000)
    {
      crc = (crc << 1) ^ polynom;
    }
    else
    {
      crc = (crc << 1);
    }
  }
  return(crc);
}
```

7.6. Acknowledge ACK (response)

DATA_ACK

An acknowledge (ACK) by the camera confirms the successful processing of commands, which do not respond with a set of data e.g. such as distance (GET_DIS).

Response type 0x00: Acknowledged (ACK)

Response data 0 bytes

Response | 0xFA | **0x00** | **0x00 0x00** | (**0 bytes**) | 0xBC 0x7D 0x6A 0x77 |

7.7. Error handling

In case of a communication error, two special responses are implemented.

DATA_NACK

System response only: Command not accepted or unknown.

Response type 0x01: Not acknowledged

Response data 0 bytes

Response | 0xFA | **0x01** | **0x00 0x00** | (**0 bytes**) | 0xDA 0xD7 0x6A 0x85 |

DATA_ERROR

System response only: Error occurred during the execution of the command. Response instead of the required data.

Response type 0xFF: Error

Response data 2 bytes: bit 0..14: Error number. Try it again. If the error remains, contact your sales responsible.
bit 15: 0

Response e.g. | 0xFA | **0xFF** | **0x02 0x00** | **0x03 0x00** | 0xC7 0x30 0x55 0x4B | (error number 3)

8. Command set overview

8.1. SET commands

Command	CMD	Ref.	Description	Comments
SET_MOD_CHANNEL	0x0E	9.1.	Interference suppression parameter setting	
SET_INT_TIME_DIST	0x00	9.2.	Integration time for the distance measurement setting	
SET_INT_TIME_GS	0x01	9.3.	Integration time for grayscale measurement setting	
SET_OPERATION_MODE	0x04	9.4.	Sets the camera's operation mode	
SET_HDR	0x0D	9.5.	High dynamic range mode setting (HDR)	
SET_ROI	0x02	9.6.	Region of interest setting (ROI)	
SET_TEMPORAL_FILTER_WFOV	0x07	9.7.	Temporal filter settings for the wide field of view	
SET_TEMPORAL_FILTER_NFOV	0x0F	9.8.	Temporal filter settings for the narrow field of view	
SET_AVERAGE_FILTER	0x0A	9.9.	Average filter settings for the distance calculation	
SET_MEDIAN_FILTER	0x0B	9.10.	Median filter settings for the distance calculation	
SET_INTERFERENCE_DETECTION	0x11	9.11.	Set interference detection settings	
SET_EDGE_DETECTION	0x10	9.12.	Set edge detection settings	
SET_FRAME_RATE	0x0C	9.13.	Sets the (maximal) frame rate	
SET_AMPLITUDE_LIMIT	0x09	9.14.	Amplitude limits settings for the confidence information	
STOP_STREAM	0x28	9.15.	Stops the stream from the camera	
SET_COMPENSATION	0x55	9.16.	Sets the compensation flags	
SET_ILLUMINATION_POWER	0x6C	9.17.	Allows a reduction of illumination power	
SET_DLL_STEP	0x06	9.18.	Sets the DLL step for artificial distance shift	

Table 10: SET commands

8.2. GET commands

Command	CMD	Ref.	Description	Comments
GET_DIST	0x20	10.5.	Performs distance acquisition	
GET_DIST_GS	0x29	10.6.	Performs distance and grayscale acquisition	
GET_DIST_AMPLITUDE	0x22	10.7.	Performs distance and TOF amplitude acquisition	
GET_GS	0x24	10.8.	Performs grayscale acquisition	
GET_DCS	0x25	10.9.	Performs DCS acquisition	
GET_CALIBRATION_INFO	0x57	10.10.	Returns information about the calibration on the device	

Table 11: GET commands

8.3. Miscellaneous commands

Command	CMD	Ref.	Description	Comments
SET_OUTPUT	0x51	11.1.	Sets the outputs OUT1 or OUT2 external loads	
GET_INPUT	0x52	11.2.	Returns the status of the IN pin	
GET_TEMPERATURE	0x4A	11.3.	Returns the chip temperature	
GET_TOFCOS_VERSION	0x49	11.4.	Returns the TOFCOS version of the camera	
GET_CHIP_INFORMATION	0x48	11.5.	Returns the epc635 Chip ID and Wafer ID	
GET_PROD_DATE	0x50	11.6.	Returns the production date of the camera	
IDENTIFY	0x47	11.7.	Returns the device ID and the operating mode	
GET_ERROR	0x53	11.8.		

Table 12: Miscellaneous commands

8.4. Factory maintenance commands

These commands shall be used with highest care. Incorrect use may lead to camera malfunction or even may destroy the camera. It may be possible that the camera is not eye safe anymore !

Command	CMD	Ref.	Description	Comments
CALIBRATE_DRNU	0x41	12.1.	Performs the DRNU calibration	Factory command only
GET_CALIBRATION	0x43	12.2.	Returns the calibration data	
JUMP_TO_BOOTLOADER	0x44	12.3.	Branches to the bootloader	
UPDATE_TOFCOS	0x45	12.4.	Copies the TOFCOS into the flash memory of the sensor	Bootloader command only
WRITE_CALIBRATION_DATA	0x4B	12.5.	Writes the calibration data into the flash memory	Deletes previous stored calibration
SET_MOD_FREQUENCY	0x05	12.6	Modulation frequency setting	
SET_BINNING	0x03	12.7	Sets on-chip analog pixel binning	

Table 13: Factory maintenance commands

9. SET commands

9.1. SET_MOD_CHANNEL [0x0E]

In the case that more than one 3D TOF cameras (or in general high frequency modulated illumination sources, higher than several MHz) operate in the same scenery, 3D TOF cameras can get disturbed by interference effects. ESPROS 3D TOF cameras operate on the synchronous demodulation principle (super-heterodyne demodulation) which is like a narrow frequency bandpass filter given by the modulation frequency. Modulated light by a “disturber” needs to operate at the same or very similar frequency to disturb an ESPROS 3D TOF camera. However, if the “disturber” operates in this narrow frequency band, it may interfere other cameras.

Interference detection

The TOFcam-635 has a built in interference detection which detects pixels with wrong distance data due to interference. The distance data of such interfered pixels are either marked with 'not valid' or return the last measurement value.

Interference avoidance

To prevent interference, the TOFcam-635 camera has an option to slightly change the modulation frequency in order to “shift” away from a disturbers frequency. Therefore, the camera has predefined “modulation channels”, each preset with a slightly shifted modulation frequency.

Parameter	byte 0:	reserved
	byte 1:	Channel 0 … 15, **default**: Channel 0
	others:	0x00
Response type	0x00:	ACK
Response time	t_{PROC} :	~ 25µs

Example

Command e.g. | 0xF5 | **0x0E** | 0x00 **0x01** 0x00 0x00 0x00 0x00 0x00 0x00 | 0xBD 0xAA 0x58 0xFC | (modulation channel 1)

Channel	NFOV frequency center frequency 10MHz	WFOV frequency center frequency 20MHz
0	10.00	20.00
1	9.60	19.20
2	9.65	19.30
3	9.70	19.40
4	9.75	19.50
5	9.80	19.60
6	9.85	19.70
7	9.90	19.80
8	9.95	19.90
9	10.05	20.10
10	10.10	20.20
11	10.15	20.30
12	10.20	20.40
13	10.25	20.50
14	10.30	20.60
15	10.35	20.70

Table 14: Modulation channels

9.2. SET_INT_TIME_DIST [0x00]

The integration time, called exposure time in 2D cameras, is the central parameter to control the camera. Like in any 2D camera, the exposure time is essential for good image quality. If the scenery is in the dark, a longer exposure time is necessary in order to make dark areas in the picture visible. On the other hand, a high brightness in the scenery needs a shorter exposure time in order not to saturate the pixels. Typically, the exposure time setting in modern digital cameras is set automatically, dependent on the illumination situation.

Every 3D camera depends also on a good integration time setting. The longer the integration time, the higher the sensitivity. Thus, a longer integration time allows the detection of objects farther away. However, high reflective objects in close distance lead to saturation in one or more pixels so distance measurement is no longer possible.

The TOFcam-635 allows manual and automatic integration time operation. In the manual mode, the integration time can be set by a parameter previous to the exposure.

In the automatic mode, the integration time is set automatically based on the brightness of the scenery. The NFOV and WFOV select independently their integration time.



It is to note that a longer integration time leads to the collection of more ambient-light. The more ambient-light collected, the higher the distance noise due to the shot noise created by the ambient-light. Thus, the shorter the integration time, the lower the distance noise. As a rule of thumb, an integration time less than 1'000µs allows a very efficient ambient-light suppression. Integration times greater than 1'000µs should be used only in indoor applications.

It is also to note that the reflectivity of an object can have an impact on the distance measurement accuracy.

IntTimeIn	FOV	No HDR	HDR	Default [µs]
0x00	WFOV	Integration time used for the full pixel-field or the ROI	1. integration time WFOV	125
0x01	WFOV		2. integration time WFOV	0
0x02	WFOV		3. integration time WFOV	0
0x03	WFOV		4. integration time WFOV	0
0x04	NFOV	Integration time used for the NFOV	1. integration time NFOV	125
0x05	reserved			
0xFF	WFOV and NFOV	Automatic mode: Integration time is set automatically between 1 and 1'000 µs	Automatic mode	

Table 15: Integration time index, refer also to Chapter 9.5.

Parameter byte 0: IntTimeIndex. Refer to Table 15.
byte 1, 2: Integration time in microseconds, 16 bit unsigned integer, Range: 1 … 1'000 µs.
others: 0x00
Response type 0x00: ACK
Response time t_{PROC} : ~ 25µs

Example
Command e.g. | 0xF5 | **0x00** | **0x00 0x1E 0x00** 0x00 0x00 0x00 0x00 0x00 | 0x47 0x7 0xEC 0xC0 | (integration time 0 = 30µs)

Consider the following amplitude returns for adequate integration time settings:

TOF amplitude	Consideration
<100 LSB	Distance results contain significant distance noise. Increase the integration time and/or apply the temporal filter to reduce the distance noise. Refer to Chapter 9.7. and 9.8.
100 ... 1'900 LSB	Good measurement data with low distance noise. However, temporal filtering is recommended. Refer to Chapter 9.7. and 9.8.
500 ... 1'900 LSB	Ideal amplitude for best performing distance data.
>1'900 LSB	Distance result can be wrong due to saturation.

Table 16: TOF amplitude rating

9.3. SET_INT_TIME_GS [0x01]

Sets the integration time for grayscale measurements. Setting gray scale integration time to zero enables the ambient light compensation. Any value different than 0 disables the ambient light compensation. Refer to chapter 9.16. There is no auto integration time mode available for gray scale.

Parameter byte 0, 1: Integration time in microseconds, 16 bit unsigned integer, Range: 1 … 50'000 µs.
Integration time = 0, ambient light compensation active, **default**.
others: 0x00
Response type 0x00: ACK
Response time t_{PROC} : ~ 25µs

Example
Command e.g. | 0xF5 | **0x01** | **0x1E 0x00** 0x00 0x00 0x00 0x00 0x00 0x00 | 0x59 0xB0 0xAC 0x6B | (integration time GS = 30µs)

9.4. SET_OPERATION_MODE [0x04]

Sets the camera's operation mode. Refer for definitions to Chapter 8.2.

Byte 0	Data	Image acquisitions for DIST an the pixel-field	No. of GET readouts	Valid GET commands	Compensation
0	WFOV (**default)**	1 frame: 160x60 pixel or ROI	1	all	active
1	NFOV	1 frame: 160x60 pixel or ROI	1	all	---
2	NFOV spot	1 frame: 1 spot pixel	1	DIST only	active
3	NFOV	1 frame: 8x8 NFOV pixel	1	DIST only	active
4	WFOV and NFOV spot	1st frame: 160x60 pixel or ROI 2nd frame: 1 spot pixel	1	DIST and/or GS	active
5	Either: WFOV, if object is inside range, else NFOV spot	1st frame: 160x60 pixel or ROI 2nd frame: else 1 spot pixel, totally: 1 or 2 frames	1	DIST or DIST and GS	active
6	Alternating frames: WFOV and NFOV	1st frame: 160x60 pixel or ROI 2nd frame: 8x8 NFOV pixel	2	2x DIST only	active

Table 17: Operation modes

Note:
A compensated distance image DIST acquires always 4 DCS frames and a grayscale frame for compensation. Whereas the regular grayscale image GS is a separate acquisition.

Parameter byte 0: Operation mode. Refer to Table 17.
others: 0
Response type 0x00: ACK
Response time t_{PROC} : ~ 25µs

Example
Command e.g. | 0xF5 | **0x04** | **0x00** 0x00 0x00 0x00 0x00 0x00 0x00 0x00 | 0xAF 0x18 0xEA 0x5B | (Mode 0)

9.5. SET_HDR [0x0D]

Sets the type of the high-dynamic range (HDR) for distance acquisition. They are preferably used in distance and TOF amplitude mode. They do not affect the grayscale modes. Please refer also to Chapter 10.7. Two different modes are available:

1. Spatial HDR

In this mode, different integration times set with IntTimeIndex0/1/2/3 for WFOV and IntTimeIndex4/5 for NFOV are used simultaneously during the acquisition of an image. IntTimeIndex0/2/4 are used for the even rows and IntTimeIndex1/3/5 for the odd rows. After image acquisition, the TOFCOS then selects the pixel with the “best” amplitude value of the up to four pixels values from the two vertical adjacent pixels and stuffs (patches) the other pixel of this pixel pair with the same value. The result is an image with a very high dynamic range, best possible frame rate but with a lower vertical resolution. Virtually, the pixel becomes a vertical rectangle because always the two vertical neighbor pixels contain the same value. Refer also to Table 15.

It is possible to use one pair, 2 integration times, only. Therefore, set the not used integration time pair to zero. In this case, the camera acquires one image by applying two different integration times for the even and the odd rows. Thus, the image acquisition is faster because there is one acquisition only instead of two.

2. Temporal HDR

The camera acquires and transmits image data in a consecutive and incrementing sequence by using IntTimeIndex0, IntTimeIndex1, IntTimeIndex2, IntTimeIndex3, IntTimeIndex4 and IntTimeIndex5. The host software has then to patch the up to four images to one HDR image by a selection of the best amplitude for each pixel. It is possible to use 2 or 3 integration times only. In this case, set not used integration times to zero.

Note: These modes cannot be used with NFOV modes.

Parameter byte 0: 0 = HDR off, **default**
1 = spatial HDR 1st step: 2 integration times in 1 frame using row reduction - and additionally 2nd step: Time-wise by 2 consecutive frames.
2 = temporal HDR Time-wise by 2, 3 or 4 consecutive frames, only non-zero values for IntTimeIndex are acquired.
others: 0
Response type 0x00: ACK
Response time t_{PROC} : ~ 25µs

Example
Command e.g. | 0xF5 | **0x0D** | **0x00** 0x00 0x00 0x00 0x00 0x00 0x00 0x00 | 0x2A 0x7C 0x6A 0xBD | (HDR off)

9.6. SET_ROI [0x02]

A full image of the TOFcam-635 has a pixel-field of 160x 60 pixels in WFOV mode. A “region of interest” acquires only a selected number of pixels which are necessary for the application. This reduces the amount of readout data and increases the frame rate. The ROI is active for the WFOV image only.

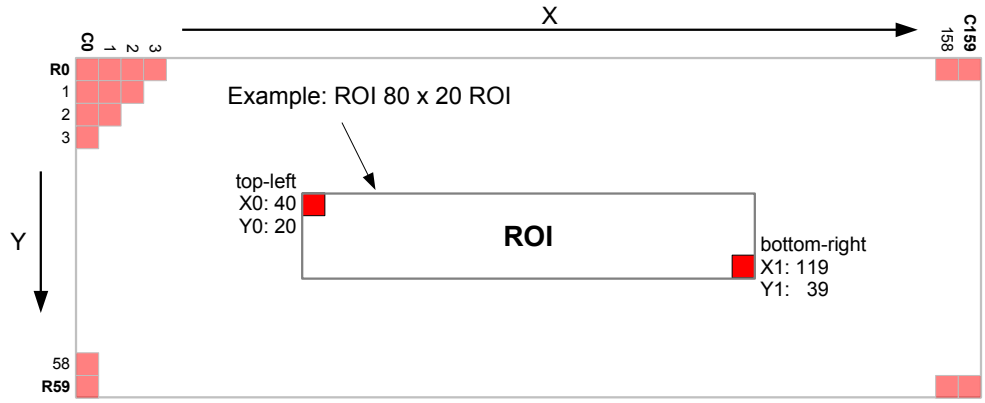

Figure 37: ROI setting

Parameter byte 0, 1: Coordinate X0, 16 bit unsigned integer
byte 2, 3: Coordinate Y0, 16 bit unsigned integer
byte 4, 5: Coordinate X1, 16 bit unsigned integer
byte 6, 7: Coordinate Y1, 16 bit unsigned integer
Ranges: X0, X1 = 0 … 159, Y0, Y1 = 0 … 59, **Default**: Full image 160x60 pixel
Boundaries: X1 – X0 > 7 pixel, Y1 – Y0 > 3 pixel, each increments by multiple of 4 pixels.

Response type 0x00: ACK

Response time t_{PROC} : ~ 25µs

Example
Command e.g. | 0xF5 | **0x02** | **0x00 0x00 0x00 0x00 0x9F 0x00 0x3B 0x00** | 0xB9 0xFC 0xA9 0x69 | (X0 = 0, Y0 = 0, X1 = 159, Y1 = 59)

9.7. SET_TEMPORAL_FILTER_WFOV [0x07]

The temporal filter is a Kalman filter, which uses two parameters: A threshold 'T' and a filter value 'k'. As long as new distance measurement values are in between ±'T' to the former distance measurement, the filter takes the average of previous distance measurement values, depending on the 'k' value. The temporal filter applies to all pixels individually.

Parameter byte 0, 1: Filter threshold in mm, typical value is 300 mm
byte 2, 3: Filter factor in steps of units. The lower the number, the stronger the filter effect, however, the slower the response to distance changes. Ideal values are between 10 and 200. If the factor is set to 1'000, the filter is disabled (**default**).
others: 0

Response type 0x00: ACK

Response time t_{PROC} : ~ 25µs

Example
Command e.g. | 0xF5 | **0x07** | **0x2C 0x01 0x64 0x00** 0x00 0x00 0x00 0x00 | 0xE9 0x45 0xAD 0xEE | (Threshold = 300 mm, factor = 100)

9.8. SET_TEMPORAL_FILTER_NFOV [0x0F]

Same as described in Chapter 9.7.

Parameter byte 0, 1: Filter threshold in mm, typical value is 300mm
byte 2, 3: Filter factor in units steps. The lower the number, the stronger the filter effect.
However, the slower the response to distance changes. Ideal values are between 10 and 200.
If the factor is set to 1'000, the filter is disabled (**default**).

Response type 0x00: ACK

Response time t_{PROC} : ~ 25µs

Example
Command e.g. | 0xF5 | **0x0F** | **0x2C 0x01 0x64 0x00** 0x00 0x00 0x00 0x00 | 0x72 0x96 0x6D 0xA3 | (Threshold = 300mm, factor = 100)

© 2022 ESPROS Photonics Corporation
Characteristics subject to change without notice

9.9. SET_AVERAGE_FILTER [0x0A]

This spatial filter uses a 2x2 pixel sliding window. It averages the distance values of the four pixels and places the result to the upper left pixel in the 2x2 window (refer to Figure 38). The sliding window is shifted all across the image. The last row and column of the image remain as they are.

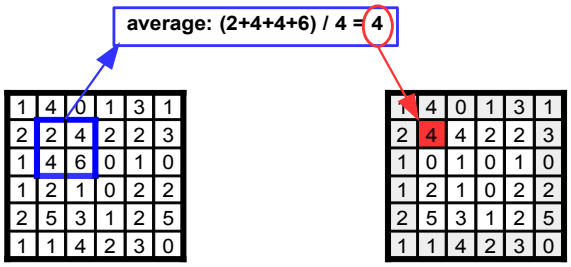

Figure 38: Example of a 2 x 2 pixel sliding window for the median filter, sliding means, do the same for all columns and rows of the image

Parameter	byte 0:	0 = disabled (**default**), 1 = enabled
	others:	0
Response type	0x00:	ACK
Response time	t_{PROC} :	~ 25µs

Example
Command e.g. | 0xF5 | **0x0A** | **0x01** 0x00 0x00 0x00 0x00 0x00 0x00 0x00 | 0x1E 0x19 0x54 0x95 | (Average filter enabled)

9.10. SET_MEDIAN_FILTER [0x0B]

This spatial filter uses a 3x3 pixel sliding window. It selects the median value of the 9 pixel in the window and places the result to the center pixel in the 3x3 window (refer to Figure 39). The sliding window is shifted all across the image. First and last row as well first and last column of the image remain as they are.

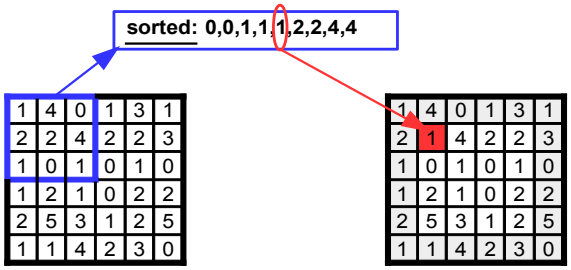

Figure 39: Example of a 3 x 3 pixel sliding window for the median filter, sliding means, do the same for all columns and rows of the image

Parameter	byte 0:	0 = disabled (**default**), 1 = enabled
	others:	0
Response type	0x00:	ACK
Response time	t_{PROC} :	~ 25µs

Example
Command e.g. | 0xF5 | **0x0B** | **0x01** 0x00 0x00 0x00 0x00 0x00 0x00 0x00 | 0x00 0xAE 0x14 0x3E | (median filter enabled)

9.11. SET_INTERFERENCE_DETECTION [0x11]

Cross-interference will lead to asymmetric zero-crossing of DCS0 versus DCS2 and / or DCS1 versus DCS3. A pixel is marked as interfered if DCS0(signed) + DCS2(signed) > threshold or DCS1(signed) + DCS3(signed) > threshold.

Set interference detection settings.

Parameter	byte 0:	0 = disabled, 1 = enabled (**default**)
	byte 1:	0 = mark pixel with status code, 1 = use last valid value (**default**)
	byte 2/3:	interference detection limit (**default 500**)
	others:	0
Response type	0x00:	ACK
Response time	t_{PROC} :	~ 25µs

Example
Command e.g. | 0xF5 | **0x11** | **0x01 0x01 0x90 0x01** 0x00 0x00 0x00 0x00 | 0x93 0xD8 0x1B 0x77 | (enabled, use last value, 400lsb)

9.12. SET_EDGE_DETECTION [0x10]

Set edge detection settings.

Parameter byte 0,1: 0 = disabled, else edge detection threshold (**default 300**)
others: 0

Response type 0x00: ACK

Response time t_{PROC} : ~ 25µs

Example

Command e.g. | 0xF5 | **0x10** | **0x2C 0x01** 0x00 0x00 0x00 0x00 0x00 0x00 | 0xDA 0x6E 0xA8 0x50 | (threshold 300)

9.13. SET_FRAME_RATE [0x0C]

This command can be used to limit the maximal frame rate. The frame rate basically depends on the integration time plus the processing time. There are two different cases to consider:

1. If the integration time plus the processing time is less than the set frame time, the set frame time limits the effective frame rate.
2. If the integration time plus the processing time is greater than set frame time, the set frame rate setting is inactive. In this case, the frame rate is given by the integration rate plus the processing time.

Parameter byte 0, 1: frame time (= 1 / frame rate) in milliseconds, 16 bit unsigned integer. Range: 10 – 200ms.
Default = 1 (allows max. possible frame rate)
others: 0

Response type 0x00: ACK

Response time t_{PROC} : ~ 25µs

Example

Command e.g. | 0xF5 | **0x0C** | **0x14 0x00** 0x00 0x00 0x00 0x00 0x00 0x00 | 0x2A 0xF7 0xB1 0x81 | (50 fps)

9.14. SET_AMPLITUDE_LIMIT [0x09]

Sets the amplitude limits for the confidence information. The limits decide if distance is valid and confidence bits are set. Refer to Table 19.

Parameter byte 0: 0 … 3 = Index of the amplitude limit to be set, for wide field , 4 = Index for narrow field
byte 2, 3: Amplitude limit in LSB, 16 bit unsigned integer. Ranges and **defaults** refer to Table 19.
others: 0

Response type 0x00: ACK

Response time t_{PROC} : ~ 25µs

Example

Command e.g. | 0xF5 | **0x09** | **0x00 0x64 0x00** 0x00 0x00 0x00 0x00 0x00 | 0xE7 0x34 0xAE 0x47 | (Set limit 0 = 100 LSB)

9.15. STOP_STREAM [0x28]

Stops the stream if the camera is in streaming mode. Refer to Figure 34 and Chapters 10.5 - 10.9.

Parameter no, all bytes 0x00. **Default**: Camera is not streaming.

Response type 0x00: ACK

Response time t_{PROC} : Max. calculation time of 1 image. Depends on settings.

Example

Command e.g. | 0xF5 | **0x28** | 0x00 0x00 0x00 0x00 0x00 0x00 0x00 0x00 | 0xF9 0x7F 0x68 0x81|

9.16. SET_COMPENSATION [0x55]

Without calibration and runtime compensation, the distance measurement is rather inaccurate and it drifts by changes in temperature and ambient-light. Thus, the TOFcam-635 is factory calibrated and it uses a runtime compensation for best possible accuracy. However, it is possible but not recommended to turn the runtime calibration off.

For ambient light compensation the integration time for gray scale needs to be set to 0. Refer to chapter 9.3.

Parameter byte 0: Distance response non-uniformity compensation (DRNU), 0 = off, 1 = active (**default**)
byte 1: Ambient-light compensation, 0 = off, 1 = active (**default**)
byte 2: Temperature compensation, 0 = off, 1 = active (**default**)
others: 0

Response type 0x00: ACK

Response time t_{PROC} : ~ 25µs

Example

Command e.g. | 0xF5 | **0x55** | **0x01 0x01 0x01** 0x00 0x00 0x00 0x00 0x00 | 0x7F 0x70 0x24 0x71 | (enable all compensations)

9.17. SET_ILLUMINATION_POWER [0x6C]

The illumination power of the WFOV can be reduced to improve accuracy at low distances.

Parameter	byte 0:	0 = normal illumination power **(default)**, 1 = low illumination power
	others:	0
Response type	0x00:	ACK
Response time	t_{PROC} :	~ 25µs

Example

Command e.g. | 0xF5 | **0x6C** | **0x01** 0x00 0x00 0x00 0x00 0x00 0x00 0x00 | 0xEE 0x79 0xD2 0x37 | (Set low illumination power)

9.18. SET_DLL_STEP [0x06]

The DLL is a delay line which is placed into the illumination modulation signal chain. Adding a delay is like moving the distance of an object to a farther distance. Based on the speed of light, a delay of one nanosecond (ns) represents a distance change of 150mm.

Sets the number of DLL steps for artificial phase/distance shifting. One step is approx. 2.15ns which is a distance change of approx. 315mm.

Parameter	byte 0:	Number of DLL steps. **Default** = 0
	others:	0x00
Response type	0x00:	ACK
Response time	t_{PROC} :	~ 25 µs

Example

Command e.g. | 0xF5 | **0x06** | **0x01** 0x00 0x00 0x00 0x00 0x00 0x00 0x00 | 0x93 0x2D 0x14 0x7C | (Number of steps = 1)

10. GET commands

The GET commands do the image acquisition and the data readout. The selection of the field-of-view WFOV, NFOV, NFOV spot is given by the operation mode. Refer to Chapter 9.4.

10.1. Acquisition modes

The acquisition modes in the “GET” commands in Chapters 10.5 to 10.9 have the following meaning:

Acquisition mode	Parameter byte 0	Description
Single measurement	0x00	The camera acquires one image
Pipelined single measurement	0x01	Parallel to the data transmission of an image on command, the next image is already acquired. This reduces the processing time of the next command. This mode gets almost the same frame rate as the streaming mode.
Streaming mode	0x02	The camera acquires continuously images and streams the data. The stream can be terminated either by an other acquisition or the STOP_STREAM command

Table 18: Acquisition mode definition

10.2. Acquisition data output formats

The data output formats of the GET commands are listed in Table 19 and 20 and are according to the selected operation modes:

Confidence bit 15, 14	Distance bit 13 … 0	Amplitude limits	Definitions and comments
Wide field-of-view (WFOV)			
Definition	0 … 7'500d or status	---	Mod. frequency 20 MHz FOV: Full frame 160x60 pixel or ROI. Refer to Figure 2 Distance range: 0 … 7.5 m Resolution: 1 mm/LSB Data: 16 bit: 2 bit confidence and 14 bit unsigned integer distance
00	< 7'500d	TOF amplitude > **AmpLimit0** **Default** = 50 LSB	**Very low amplitude:** The result shows the presence of an object, but distance information is very inaccurate.
10	< 7'500d	TOF amplitude > **AmpLimit1** **Default** = 100 LSB	**Weak amplitude:** Distance result is usable but has reduced accuracy.
10	< 7'500d	TOF amplitude > **AmpLimit2** **Default** = 200 LSB	**Good amplitude:** Good distance information.
11	< 7'500d	TOF amplitude > **AmpLimit3** **Default** = 500 LSB	**Excellent amplitude:** Most accurate distance measurement.
Don't care	> 7'500d	TOF amplitude < **AmpLimit0**	**Distance not available or out of range:** Check distance status.
Status	16'001d	---	Low TOF amplitude
	16'002d	---	Exceeds A/D conversion limits
	16'003d	---	Pixel saturation
	16'007d	---	Modulation interference or Motion-blur
	16'008 d	---	Filtered out by edge detection
Narrow field-of-view (NFOV)			
Definition	0 … 15'000d or status	---	Mod. frequency 10 MHz FOV: 8x8 NFOV pixel, Refer to Figure 2 (center beam). Based on effectively 16x16 pixel binned, analog on-chip pairwise, horizontally and vertically. Distance range: 0 … 15 m. Resolution: 1 mm/LSB Data: 16 bit: unsigned integer distance
n/a	< 15'000d	TOF amplitude > **AmpLimit4** **Default** = 200 LSB	The NFOV pixel is **valid**. It is used also for averaging of NFOV spot data.
n/a	Don't care	TOF amplitude < **AmpLimit4**	The NFOV pixel is marked as “**low TOF amplitude**”.
Status	Refer to WFOV		

Table 19: Definition and decision table for distance data and confidence (refer also to Chapter 9.14.)

Confidence bit 15, 14	Distance bit 13 … 0	Amplitude limits	Definitions and comments
Narrow field-of-view spot (NFOV spot)			
Definition	(Part of header) 0 … 15'000d or status	(Part of header) 0 … 2'896 LSB	Mod. frequency 10 MHz FOV: 1 spot pixel. Refer to Figure 2 (center beam). It is the digital average of the 8x8 NFOV pixels. Distance range: 0 … 15 m. Resolution: 1 mm/LSB Data: 16 bit: unsigned integer distance 16 bit: unsigned integer amplitude
n/a	< 15'000d	TOF amplitude > **AmpLimit4** **Default** = 200 LSB	NFOV spot value is the average of the **valid** NFOV pixels.
n/a	Don't care	TOF amplitude < **AmpLimit4**	Not valid NFOV pixels are **excluded** from the average. Are all NFOV pixels below the limit, the status is “low TOF amplitude”.
n/a	0xFFFF	0xFFFF	No data available with the selected mode.
Status	Refer to WFOV		

Table 19 cont.: Definition and decision table for distance data and confidence (refer also to Chapter 9.14.)

In the cases where the camera uses modes responding with distance results only and without other quality information, the distance data format per pixel encloses two bits with quality information of the measurement, called confidence data. Refer to Table 19. This confidence data is based on the TOF amplitude. Refer also to Chapters 10.5 and 10.6.

The levels for checking the confidence are initialized by default, to values out of practice. A change to application specific values is possible. Refer to Chapter 9.14.

It is to note that the reflectivity of the object can have an impact on the distance measurement accuracy. Make sure, the amplitudes are in the specified range.

Definition	Type	Data	Amplitude
TOF amplitude	AMP	16 bit: 4 bit not used and 12 bit unsigned integer TOF amplitude.	0 … 2'896 LSB, no status
Grayscale	GS	8 bit unsigned integer grayscale	0 … 255 LSB, no status
DCS data	DCSx	16 bit: 12 bit unsigned integer DCS, 3 bit not used, 1 bit saturation flag Signed DCS value = readout value – 2'048 LSB.	0 … 4'095 LSB, no status

Table 20: Definitions of other data formats

10.3. Response header

Every response to a command request for distance, grayscale, amplitude and DCSx includes this header as a fix part of the transmission. It contains information about the parameter settings for the acquisition and to the system. The application can skip the information if not needed.

Entry	Format	Bytes	Index	Comment
Header version	8 bit unsigned integer	1	0	Protocol identification against future, changed versions.
Frame counter	16 bit unsigned integer	2	1	Increment per frame, roll over at 65'535
Timestamp	16 bit unsigned integer	2	3	Increment per millisecond, roll over at 65'535s
TOFCOS version	MSBytes: 16 bit unsigned Version LSBytes: 16 bit unsigned Sub-version	4	5	Refer to Chapter 11.4
Hardware version	8 bit unsigned integer	1	9	Refer to Chapter Fehler: Referenz nicht gefunden
Chip ID	16 bit unsigned integer	2	10	Refer to Chapter 11.5
Image width (x-axis)	16 bit unsigned integer	2	12	Refer to Chapter 9.6
Image height (y-axis)	16 bit unsigned integer	2	14	
Image origin X	16 bit unsigned integer	2	16	
Image origin Y	16 bit unsigned integer	2	18	

Table 21: Header parameters

<table>
<tr><th>Entry</th><th>Format</th><th>Bytes</th><th>Index</th><th>Comment</th></tr>
<tr><td>CurrentIntegrationTime3D WFOV</td><td>16 bit unsigned integer</td><td>2</td><td>20</td><td>Used integration time.
Spatial HDR mode: It is the first of the two integration times.</td></tr>
<tr><td>CurrentIntegrationTime3D NFOV</td><td>16 bit unsigned integer</td><td>2</td><td>22</td><td>Used integration time.
Spatial HDR mode: It is the first of the two integration times.</td></tr>
<tr><td>CurrentIntegrationTimeGrayscale</td><td>16 bit unsigned integer</td><td>2</td><td>24</td><td>Used integration time.</td></tr>
<tr><td>IntegrationTimeGrayscale</td><td>16 bit unsigned integer</td><td>2</td><td>26</td><td>Refer to Chapter 9.3</td></tr>
<tr><td>IntegrationTime0 WFOV</td><td>16 bit unsigned integer</td><td>2</td><td>28</td><td rowspan="6">Refer to Chapter 9.2</td></tr>
<tr><td>IntegrationTime1 WFOV</td><td>16 bit unsigned integer</td><td>2</td><td>30</td></tr>
<tr><td>IntegrationTime2 WFOV</td><td>16 bit unsigned integer</td><td>2</td><td>32</td></tr>
<tr><td>IntegrationTime3 WFOV</td><td>16 bit unsigned integer</td><td>2</td><td>34</td></tr>
<tr><td>IntegrationTime4 NFOV</td><td>16 bit unsigned integer</td><td>2</td><td>36</td></tr>
<tr><td>Integration time5 NFOV</td><td>16 bit unsigned integer</td><td>2</td><td>38</td></tr>
<tr><td>InterferenceDetectionLevel</td><td>16 bit unsigned integer</td><td>2</td><td>40</td><td></td></tr>
<tr><td>EdgeDetectionThreshold</td><td>16 bit unsigned integer</td><td>2</td><td>42</td><td></td></tr>
<tr><td>AmplitudeLimit0 WFOV</td><td>16 bit unsigned integer</td><td>2</td><td>44</td><td rowspan="5">Refer to Chapter 9.14</td></tr>
<tr><td>AmplitudeLimit1 WFOV</td><td>16 bit unsigned integer</td><td>2</td><td>46</td></tr>
<tr><td>AmplitudeLimit2 WFOV</td><td>16 bit unsigned integer</td><td>2</td><td>48</td></tr>
<tr><td>AmplitudeLimit3 WFOV</td><td>16 bit unsigned integer</td><td>2</td><td>50</td></tr>
<tr><td>AmplitudeLimit4 NFOV</td><td>16 bit unsigned integer</td><td>2</td><td>52</td></tr>
<tr><td>Reserved</td><td>-</td><td>2</td><td>54</td><td></td></tr>
<tr><td>Binning type</td><td>8 bit unsigned integer</td><td>1</td><td>56</td><td>Refer to Chapter 12.7</td></tr>
<tr><td>DistanceTemporalFilter-Factor WFOV</td><td>16 bit unsigned integer</td><td>2</td><td>57</td><td rowspan="2">Temporal Filter all pixels.
Refer to Chapter 9.7</td></tr>
<tr><td>DistanceTemporalFilter-Threshold WFOV</td><td>16 bit unsigned integer</td><td>2</td><td>59</td></tr>
<tr><td>SingleValueTemporalFilter-Factor NFOV</td><td>16 bit unsigned integer</td><td>2</td><td>61</td><td rowspan="2">Temporal Filter single spot
Refer to Chapter 9.8</td></tr>
<tr><td>SingleValueTemporalFilter-Threshold NFOV</td><td>16 bit unsigned integer</td><td>2</td><td>63</td></tr>
<tr><td>Modulation frequency</td><td>8 bit unsigned integer
0: 10MHz, 1: 20MHz</td><td>1</td><td>65</td><td>Refer to Chapter 12.6
Op. Mode 4: Only WFOV freq.</td></tr>
<tr><td>Modulation channel</td><td>8 bit unsigned integer</td><td>1</td><td>66</td><td>Modulation channel selection to prevent from multi camera interference. Refer to Chapter 9.1.</td></tr>
<tr><td>Flags</td><td>
<table>
<tr><th>Bit</th><th>Abbr.</th><th>Comment</th></tr>
<tr><td>0</td><td>AM</td><td>AutoModulationChannel</td></tr>
<tr><td>1</td><td>AI</td><td>AutoIntegrationTime</td></tr>
<tr><td>2</td><td>AF</td><td>Average filter</td></tr>
<tr><td>3</td><td>MF</td><td>Median filter</td></tr>
<tr><td>4</td><td>CD</td><td>Compensated DRNU</td></tr>
<tr><td>5</td><td>CT</td><td>Compensated temperature</td></tr>
<tr><td>6</td><td>CA</td><td>Compensated ambient-light</td></tr>
<tr><td>7</td><td>SH</td><td>Spatial HDR</td></tr>
<tr><td>8</td><td>TH</td><td>Temporal HDR</td></tr>
<tr><td>9</td><td>TP</td><td>Input pin</td></tr>
<tr><td>10</td><td>UL</td><td>Use last value (interference)</td></tr>
<tr><td>11</td><td>RI</td><td>Reduced illumination power</td></tr>
<tr><td>12..15</td><td>NU</td><td>not used</td></tr>
</table>
</td><td>2</td><td>67</td><td></td></tr>
</table>

Table 21 cont.: Header parameters

Entry	Format	Bytes	Index	Comment
Temperature	16 Bit 2's complement signed integer 0.01°C / LSB	2	69	Refer to Chapter 11.3.
FOV	8 Bit unsigned integer 0: Header only, means NFOV spot 1: WFOV image data 2: NFOV image data	1	71	Refer to Chapter 9.4.
NFOV spot data distance	16 Bit unsigned integer 0 … 15'000d or status, 0xFFFF: not available with selected mode.	2	73	Refer to Chapter 9.4.
NFOV spot data amplitude	16 Bit unsigned integer 0 … 2'896d or status, 0xFFFF: not available with selected mode.	2	74	
NFOV spot x coordinate	8 Bit unsigned integer 0xFF: not available with selected mode.	1	76	
NFOV spot y coordinate	8 Bit unsigned integer 0xFF: not available with selected mode.	1	77	
Reserved	-	2	78	
Header bytes	**in total**	**80**		

Table 21 cont.: Header parameters

10.4. Warm-up

The distance accuracy of TOF cameras is sensitive to temperature change due to the temperature dependent electron mobility velocity in semiconductors. This phenomenon effects the speed of the electrons of the illumination, the illumination driver, the pixel of the imager chip, etc. Thus, an effective temperature compensation is implemented into the TOFcam-635. However, if there are fast and large temperature changes of the camera, the measured distance may deviate significantly from the real object distance. Such a large and fast temperature step takes place when the camera is powered on, until the operating temperature reaches its equilibrium. Figure 40 shows a typical error curve of a pixel during power up.

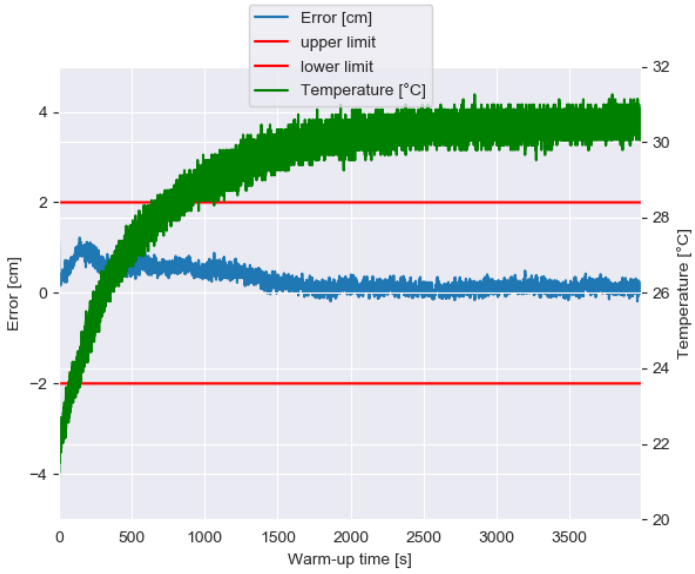

Figure 40: Typical warm-up phase of camera at room temperature

10.5. GET_DIST [0x20]

Performs distance acquisition. Refer to Figure 41. It returns, in streaming mode continuously, the result or status. For parameter settings and response details, refer to Table 17, 18, and 19.

Parameter byte 0: Acquisition mode. Refer to Table 18.
others: 0

Response type 0x03: Distance

Response data 80 bytes header (refer to Chapter 10.3, includes NFOV spot data)
+ max. 160x60 pixel x 2 bytes/pixel WFOV or NFOV distance data (refer to Table 19).
Modes, only responding with NFOV spot data, transmit the header only.

Response time up to ~100ms depending on settings

Example
Command e.g | 0xF5 | **0x20** | **0x00** 0x00 0x00 0x00 0x00 0x00 0x00 0x00 | 0x62 0xAC 0xA8 0xCC | (Acquisition mode 0)

Response e.g | 0xFA | **0x03** | **0x50 0x4B** | **0x28 0x0F 0x00 0x00 … (19'280 bytes total)** | CRC (4 bytes) |

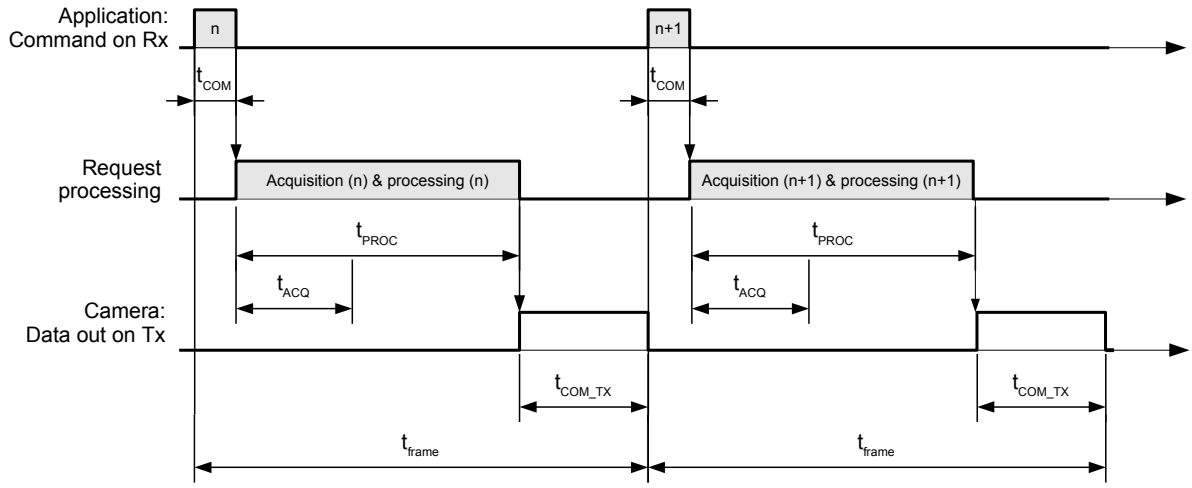

Figure 41: Timing of a single distance measurement

10.6. GET_DIST_GS [0x29]

Performs distance and grayscale acquisition. It returns, in streaming mode continuously, the result or status. For parameter settings and response details, refer to Table 17, 18, 19 and 20.

Parameter byte 0: Acquisition mode. Refer to Table 18.
others: 0

Response type 0x0A: Distance and grayscale

Response data 80 bytes header (refer to Chapter 10.3, includes NFOV spot data) + max. 160x60 pixel x 3 bytes/pixel
WFOV or NFOV data with 16 bit distance data (refer to Table 19) and 8 bit grayscale data (refer to Table 20).
Only applicable to modes 0, 1, 4 and 5, refer to Table 17.
Modes, only responding with NFOV spot data, transmit the header only. Thereof, no grayscale data are available.

Response time up to ~150ms depending on settings

Example
Command e.g | 0xF5 | **0x29** | **0x00** 0x00 0x00 0x00 0x00 0x00 0x00 0x00 | 0xE7 0xC8 0x28 0x2A | (Acquisition mode 0)
Response e.g | 0xFA | **0x0A** | **0xD0 0x70** | **0x28 0x0F 0x00 0x00 … (28'880 bytes total)** | CRC (4 bytes) |

10.7. GET_DIST_AMPLITUDE [0x22]

Performs distance and TOF amplitude acquisition. It returns, in streaming mode continuously, the result or status. For parameter settings and response details, refer to Table 17, 18, 19 and 20.

Parameter byte 0: Acquisition mode. Refer to Table 18.
others: 0

Response type 0x05: Distance and amplitude

Response data 80 bytes header (refer to Chapter 10.3, includes NFOV spot data) + max. 160x60 pixel x 4 bytes/pixel
WFOV or NFOV data with 16 bit distance data (refer to Table 19) and 16 bit TOF amplitude (refer to Table 20).
Only applicable to modes 0 and 1, refer to Table 17.

Response time up to ~150ms depending on settings

Example
Command e.g. | 0xF5 | **0x22** | **0x00** 0x00 0x00 0x00 0x00 0x00 0x00 0x00 | 0xE9 0xDF 0xE8 0x9E | (Acquisition mode 0)
Response | 0xFA | **0x05** | **0x50 0x96** | **0x28 0x0F 0x00 0x00 … (38'480 bytes total)** | CRC (4 bytes) |

10.8. GET_GS [0x24]

Performs grayscale acquisition. It returns, in streaming mode continuously, the result or status. For parameter settings and response details, refer to Table 17, 18 and 20.

Parameter byte 0: Acquisition mode. Refer to Table 18.
others: 0

Response type 0x06: Grayscale

Response data 80 bytes header (refer to Chapter 10.3) + max. 160x60 pixel x 1 byte/pixel with 8 bit grayscale data (refer to Table 20).
Only applicable to modes 0, 1, 4 and 5, refer to Table 17.
Modes, only responding with NFOV spot data, transmit the header only.

Response time up to ~100ms depending on settings

Example
Command e.g | 0xF5 | **0x24** | **0x00** 0x00 0x00 0x00 0x00 0x00 0x00 0x00 | 0x74 0x4B 0x28 0x68 | (Acquisition mode 0)
Response | 0xFA | **0x06** | **0xD0 0x25** | **0x28 0x0F 0x00 0x00 … (9'680 bytes total)** | CRC (4 bytes) |

10.9. GET_DCS [0x25]

Performs DCS acquisition. It returns, in streaming mode continuously, the result or status. For parameter settings and response details, refer to Table 17, 18 and 20.

Parameter byte 0: Acquisition mode. Refer to Table 18.
others: 0

Response type 0x07: DCS data

Response data 1 command "GET_DCS" transmits the data in one or two packets with the following data,
80 bytes header (refer to Chapter 10.3) + 1 byte packet number + 4 bytes total size
+ max. 50'000 bytes (160x60 pixel x 2 bytes/pixel with 16 bit DCS data (refer to Table 20)).
Only applicable to mode 0, refer to Table 17.

Response time up to ~200ms depending on settings

Example
Command e.g | 0xF5 | **0x25** | **0x00** 0x00 0x00 0x00 0x00 0x00 0x00 0x00 | 0x6A 0xFC 0x68 0xC3 | (Acquisition mode 0)
Response | 0xFA | **0x07** | **0x50 0xC3** | **0x00** | 0x00 0x2C 0x01 0x00 | **0x28 0x0F 0x00 … (50'000 bytes total)** | CRC (4 bytes) |
| 0xFA | **0x07** | **0xB0 0x68** | **0x01** | 0x00 0x2C 0x01 0x00 | **0x28 0x0F 0x00 … (26'800 bytes total)** | CRC (4 bytes) |

10.10. GET_CALIBRATION_INFO [0x57]

Returns information about the calibration on the device. These includes a flag about calibration data consistency.

Parameter all 0

Response type 0xF6: Calibration info data

Response data
1 byte WFOV modulation frequency (0 = 10MHz, 1 = 20MHz),
1 byte WFOV binning (0 = no binning, 1 = horizontal/vertical binning),
1 byte NFOV modulation frequency (0 = 10MHz, 1 = 20MHz),
1 byte NFOV binning (0 = no binning, 1 = horizontal/vertical binning),
2 bytes NFOV calibration X coordinate,
2 bytes NFOV calibration Y coordinate,
2 bytes NFOV width,
1 byte NFOV height,
1 byte CRC correct flag (0 = incorrect, 1 = correct),
2 bytes unused

Response time ~10ms

Example
Command e.g | 0xF5 | **0x57** | 0x00 0x00 0x00 0x00 0x00 0x00 0x00 0x00 | 0xBA 0xDC 0xEF 0x5E |
Response e.g | 0xFA | **0xF6** | **0x0D 0x00** | **0x01 0x00 | 0x00 0x01 0x38 0x00 0x06 0x00 0x30 0x00 0x30 0x00 | 0x01** | 0x01 0x60 0x87 0xD8 (WFOV 20MHz, no binning, NFOV 10MHz, binning, 56, 6, 48, 48, CRC correct)

11. Miscellaneous commands

11.1. SET_OUTPUT [0x51]

Sets the outputs OUT1 or OUT2. Can be used by the application to switch external loads.

Parameter	byte 0:	Open-drain OUT1, 0x00 = OFF (**default**), 0x01 = ON
	byte 1:	Open-drain OUT2, 0x00 = OFF (**default**), 0x01 = ON
	others:	0x00
Response type	0x00:	ACK
Response time	t_{PROC} :	~ 25µs

Example
Command e.g. | 0xF5 | **0x51** | **0x01 0x01** 0x00 0x00 0x00 0x00 0x00 0x00 | 0x25 0x5A 0x1D 0x10 | (Set both outputs = ON)

11.2. GET_INPUT [0x52]

Returns the status of the IN pin. Can be used by the application to read an external digital signal, e.g. a switch status.

Parameter	no, all bytes 0x00	
Response type	0x0B:	IO
Response data	1 byte:	0x00 = input LOW, 0x01 = input HIGH
Response time	t_{PROC} :	~ 25µs

Example
Command e.g. | 0xF5 | **0x52** | 0x00 0x00 0x00 0x00 0x00 0x00 0x00 0x00 | 0xB2 0x8C 0x2F 0x51 |
Response e.g. | 0xFA | **0x0B** | **0x01 0x00** | **0x00** | 0xCD 0x50 0x9D 0xE0 | (Input = LOW)

11.3. GET_TEMPERATURE [0x4A]

Returns the chip temperature during last distance acquisition.

Parameter	no, all bytes 0x00	
Response type	0xFC:	Data
Response data	2 bytes:	Temperature, 0.01 ºC / LSB, 16 bit 2's complement signed integer.
Response time	t_{PROC}:	~ 25 µs

Example
Command e.g. | 0xF5 | **0x4A** | 0x00 0x00 0x00 0x00 0x00 0x00 0x00 0x00 | 0x1F 0xF8 0x6E 0x87 |
Response e.g. | 0xFA | **0xFC** | **0x02 0x00** | **0x47 0x13** | 0x54 0x1E 0x4C 0x14 | (Temperature = 49.35°C)

11.4. GET_TOFCOS_VERSION [0x49]

Returns the TOFCOS version and sub-version of the camera.

Parameter	no, all bytes 0x00	
Response type	0xFE:	Data
Response data	4 bytes:	byte 0, 1: Subversion, 16 bit unsigned integer
		byte 2, 3: Version, 16 bit unsigned integer
Response time	t_{PROC}:	~ 25 µs

Example
Command e.g. | 0xF5 | **0x49** | 0x00 0x00 0x00 0x00 0x00 0x00 0x00 0x00 | 0x8A 0x3C 0x6E 0x7E |
Response e.g. | 0xFA | **0xFE** | **0x04 0x00** | **0x0E 0x00 0x01 0x00** | 0xE6 0xC5 0x85 0xA0 | (Version 1.14)

11.5. GET_CHIP_INFORMATION [0x48]

Returns the Chip ID and Wafer ID of the used epc635 imager chip.

Parameter	no, all bytes 0x00	
Response type	0xFD:	Data
Response data	4 bytes:	byte 0, 1: Chip ID, 16 bit unsigned integer
		byte 2, 3: Wafer ID, 16 bit unsigned integer
Response time	t_{PROC}:	~ 25 µs

Example
Command e.g. | 0xF5 | **0x48** | 0x00 0x00 0x00 0x00 0x00 0x00 0x00 0x00 | 0x94 0x8B 0x2E 0xD5|
Response e.g. | 0xFA | **0xFD** | **0x04 0x00** | **0x10 0x04 0x10 0x00** | 0x49 0x2C 0xBB 0x6A | (Chip ID 1040 , Wafer ID 16)

11.6. GET_PROD_DATE [0x50]

Returns the production date of the camera.

Parameter	no, all bytes 0x00		
Response type	0xF9:	Data	
Response data	2 bytes:	byte 0:	Last two digits of the year as unsigned integer e.g. 18
		byte 1:	Number of the week as integer e.g. 22
Response time	~ 25 µs		

Example

Command e.g. | 0xF5 | **0x50** | 0x00 0x00 0x00 0x00 0x00 0x00 0x00 0x00 | 0x39 0xFF 0x6F 0x3 |
Response e.g. | 0xFA | **0xF9** | **0x02 0x00** | **0x12 0x16** | 0x4A 0x68 0xF7 0xA7 | (year 18, week 22)

11.7. IDENTIFY [0x47]

Returns the device identification ID and the mode (normal operation or bootloader mode if a TOFCOS update was not successful). Is the camera in bootloader mode, run a TOFCOS update with the GUI ESPROS_TOFCAM635 or with the bootloader (see next). The GUI detects a missing TOFCOS and runs an update automatically. This command may be used also for communication check.

Parameter	no, all bytes 0x00		
Response type	0x02:	Data	
Response data	4 bytes:	byte 0:	Hardware version
		byte 1:	Device type is TOFcam-635 = 0x00
		byte 2:	Chip type is epc635 = 0x04
		byte 3:	0x00 = normal operation, 0x80 = bootloader
Response time	t_{PROC} :	~ 25µs	

Example

Command e.g. | 0xF5 | **0x47** | 0x00 0x00 0x00 0x00 0x00 0x00 0x00 0x00 | 0x8C 0x7B 0x6E 0xC5 |
Response e.g. | 0xFA | **0x02** | **0x04 0x00** | **0x00 0x00 0x04 0x00** | 0xE5 0x48 0x22 0x5D | (HW version 0, normal operation)

11.8. GET_ERROR [0x53]

Returns a number of the error of the device.

Parameter	no, all bytes 0x00	
Response type	0xFF:	Data
Response data	2 bytes:	Error number
	Error number 0: No error	
	Error number 1: Timeout	
	Error number 2: Error data acquisition	
	Error number 3: Error sensor communication	
Response time	t_{PROC}:	~ 25 µs

Example

Command e.g. | 0xF5 | **0x53** | 0x00 0x00 0x00 0x00 0x00 0x00 0x00 0x00 | 0xAC 0x3B 0x6F 0xFA |
Response e.g. | 0xFA | **0xFF** | **0x02 0x00** | **0x03 0x00** | 0xC7 0x30 0x55 0x4B | (Error sensor communication)

12. Factory maintenance commands

Use these commands only if you are familiar with its operation. Wrong usage may lead to an uncalibrated, non-working or even damaged TOFcam-635! In general, these commands are not needed for standard usage of the TOFcam-635.

12.1. CALIBRATE_DRNU [0x41]

Performs the DRNU calibration in the calibration box (more information about this from your ESPROS sales representative). It is to note that this command can take several minutes. Never remove the camera from the calibration box until the calibration process has been finished.

Deletes previous stored calibration!

Parameter	byte 0:	0 = calibrate and verify, 1 = verify only
	byte 1:	bit0 = flag for wide field, bit1 = flag for narrow field, 1 = calibrate, 0 = do not calibrate
	byte 2:	0x45
	byte 3:	0x67
	byte 4:	0x89
	byte 5:	0xAB
	byte 6:	0xCD
	byte 7:	0xEF
Response type	0x00:	ACK
Response time	t_{PROC} :	~ 15minutes

Example
Command e.g. | 0xF5 | **0x41** | **0x01 0x01 0x45 0x67 0x89 0xAB 0xCD 0xEF** | 0x20 0x11 0x7 0x3E | (Verify WFOV)

12.2. GET_CALIBRATION [0x43]

Returns the calibration data after t_{PROC} . Use this command to backup the calibration data before a TOFCOS update or new calibration.

Parameter	no, all bytes 0x00	
Response type	0xFA:	Calibration data, 128kBytes data directly read from the flash, transmitted in 3 packets (2 packets with 50'000 bytes and the last with 31072 bytes). Each packet starts with 1 byte packet number + 4 bytes total size
Response data	0 byte	
Response time	t_{PROC} :	~ 25µs

Example
Command e.g. | 0xF5 | **0x43** | 0x00 0x00 0x00 0x00 0x00 0x00 0x00 0x00 | 0x9A 0x9C 0xEE 0x61
Response e.g | 0xFA | **0xFA** | **0x50 0xC3** | **0x00** | 0x00 0x00 0x02 0x00 | **0x28 0x0F 0x00 … (50'000 bytes total)** | CRC (4 bytes) |
| 0xFA | **0xFA** | **0x50 0xC3** | **0x01** | 0x00 0x00 0x02 0x00 | **0x28 0x0F 0x00 … (50'000 bytes total)** | CRC (4 bytes) |
| 0xFA | **0xFA** | **0x60 0x79** | **0x02** | 0x00 0x00 0x02 0x00 | **0x28 0x0F 0x00 … (26'800 bytes total)** | CRC (4 bytes) |

12.3. JUMP_TO_BOOTLOADER [0x44]

Stops all normal operation activities and branches to the bootloader. The bootloader answers to this and all following commands. Refer also to Chapter 13.

Parameter	no, all bytes 0x00	
Response type	0x00:	ACK
Response time	t_{PROC} :	< 10ms

Example
Command e.g. | 0xF5 | **0x44** | 0x00 0x00 0x00 0x00 0x00 0x00 0x00 0x00 | 0x19 0xBF 0x6E 0x3C

12.4. UPDATE_TOFCOS [0x45]

Bootloader command only: Copies the TOFCOS into the flash memory of the sensor. It returns acknowledge after t_{PROC}.

Procedure 1st, write control byte "start" with password and file size; 2nd, write control byte "write" with index and data; 3rd, write control byte "complete".

Parameter 8 bytes: Contents differs and depends on operation step: Refer to Table 22.

Step	Action	Byte 0	Byte 1	Byte 2	Byte 3	Byte 4	Byte 5	Byte 6	Byte 7
1st	Start	**0x00**	Password = 0x654321			Size of the update file			
2nd	Write data	**0x01**	TOFCOSData[index] (3 bytes)			TOFCOS data (4 bytes)			
3rd	Complete	**0x02**	All 7 bytes = 0x00						

Table 22: Bootloader data format

Response type 0x00: ACK

Response time t_{PROC} : <1.2s, refer to to Table 24.

Example

Command e.g. | 0xF5 | **0x45** | **0x00 0x21 0x43 0x65 0x10 0x00 0x00 0x00** | 0xBF 0x90 0xC2 0x9F | (Start for 16 byte file size)
| 0xF5 | **0x45** | **0x01 0x00 0x00 0x00 0x10 0x4A 0x56 0x50** | 0x1C 0x41 0xAC 0x14 | (Write data to index 0)
| 0xF5 | **0x45** | **0x02 0x00 0x00 0x00 0x00 0x00 0x00 0x00** | 0x69 0x85 0x52 0x7C | (Complete)

12.5. WRITE_CALIBRATION_DATA [0x4B]

Writes the calibration data into the flash memory. This data is used during runtime DRNU compensation.

⚠ Deletes previous stored calibration!

Procedure 1st, write control byte "start" with password and file size; 2nd, write control byte "write" with index and data; 3rd, write control byte "complete".

Parameter 8 bytes: Contents differs and depends on operation step: Refer to Table 23.

Step	Action	Byte 0	Byte 1	Byte 2	Byte 3	Byte 4	Byte 5	Byte 6	Byte 7
1st	Start	**0x00**	Password = 0x654321			Size of the update file			
2nd	Write data	**0x01**	CalibrationData[index] (3 bytes)			Calibration data (4 bytes)			
3rd	Complete	**0x02**	All 7 bytes = 0x00						

Table 23: Calibration data format

Response type 0x00: ACK

Response time t_{PROC} : <400ms

Example

Command e.g. | 0xF5 | **0x4B** | **0x00 0x21 0x43 0x65 0x10 0x00 0x00 0x00** | 0xB9 0xD7 0xC2 0x24 | (Start for 16 byte file size)
| 0xF5 | **0x4B** | **0x01 0x00 0x00 0x00 0x10 0x4A 0x56 0x50** | 0x1A 0x06 0xAC 0xAF | (Write data to index 0)
| 0xF5 | **0x4B** | **0x02 0x00 0x00 0x00 0x00 0x00 0x00 0x00** | 0x6F 0xC2 0x52 0xC7 | (Complete)

12.6. SET_MOD_FREQUENCY [0x05]

Sets the modulation frequency. The modulation frequency defines the operating range, the distance resolution and distance noise.

Parameter byte 0: 0x00 = 10 MHz (**Default** for NFOV); 0x01 = 20 MHz (**Default** for WFOV)
others: 0x00

Response type 0x00: ACK

Response time t_{PROC} : ~ 25µs

Example

Command e.g. | 0xF5 | **0x05** | **0x01** 0x00 0x00 0x00 0x00 0x00 0x00 0x00 | 0x6 0xE9 0x14 0x85 | (20 MHz)

12.7. SET_BINNING [0x03]

Sets on-chip analog pixel binning. The binning increases the sensitivity approximately by a factor of four. And, it reduces the number of readout rows and columns by half each for the full image. It can be used with operation mode 0 and 1 (refer to Chapter 9.4.). Images with binning are not calibrated, except the distance.

Boundaries for the ROI with binning: X1 – X0 > 11 pixel, Y1 – Y0 > 3 pixel, each increments by multiple of 4 pixels.

Parameter byte 0: 0 = no binning (**default**), 1 = horizontal and vertical pixel binning.
others: 0

Response type 0x00: ACK

Response time t_{PROC} : ~ 25µs

Example

Command e.g. | 0xF5 | **0x03** | **0x00** 0x00 0x00 0x00 0x00 0x00 0x00 0x00 | 0x2C 0x3B 0x6A 0x06 | (No binning)

13. Update camera operating system TOFCOS

TOFCOS update can be done on site. ESPROS provides a TOFCOS “file” as part of the “TOFCAM635_SW_Package” on the website www.espros.com.

Important:
The upgrade will delete the calibration data. Therefore, first, read back the calibration data from the camera (refer to Chapter Fehler: Referenz nicht gefunden). After the TOFCOS update, restore the calibration data back again to the device (refer to Chapter Fehler: Referenz nicht gefunden).

The command sequence according Table 24 must be executed to upload the latest release of the TOFCOS to the camera.

The following example of a TOFCOS update file with 16 bytes is used in the table below (No valid file, for demonstration purposes only):

0x10 0x4A 0x56 0x50 0xFF 0x67 0xA0 0xC0 0x23 0x45 0xAA 0x00 0x34 0x78 0x99 0xBB

Application action	Device reaction	Device answer
Send command “JUMP_TO_BOOTLOADER”: | 0xF5 | **0x44** | 0x00 0x00 0x00 0x00 0x00 0x00 0x00 0x00 | 0x19 0xBF 0x6E 0x3C |	Jump to bootloader	ACK
Note: If the command was executed correctly then the device sends an additional response prior to the ACK: | **0xF0 0x65 0x73 0x70 0x72 0x6F 0x73 0x00** | This is an internal response which needs to be ignored.		
1st step, send command “UPDATE_TOFCOS” with the control byte “0x00”, the password and the size of the update file: | 0xF5 | **0x45** | **0x00 0x21 0x43 0x65 0x10 0x00 0x00 0x00** | 0xBF 0x90 0xC2 0x9F |	Start update: Verify password and store file size	ACK
2nd step, send the command “UPDATE_TOFCOS” with the control byte “0x01”, the index and 4 bytes of the “update file”. Repeat this step as often as needed = Update file size / 4, e.g. with given update file above: | 0xF5 | **0x45** | **0x01 0x00 0x00 0x00 0x10 0x4A 0x56 0x50** | 0x1C 0x41 0xAC 0x14 | | 0xF5 | **0x45** | **0x01 0x04 0x00 0x00 0xFF 0x67 0xA0 0xC0** | 0x19 0xEE 0xB7 0x69 | | 0xF5 | **0x45** | **0x01 0x08 0x00 0x00 0x23 0x45 0xAA 0x00** | 0x4D 0x59 0x58 0x4B | | 0xF5 | **0x45** | **0x01 0x0C 0x00 0x00 0x34 0x78 0x99 0xBB** | 0x31 0x9F 0x07 0x08 |	Write update: Store data Store data Store data Store data	 ACK ACK ACK ACK
Note: This command deletes the flash storage. After the third repetition this leads to a response delay up to 1.2 seconds.		
3rd step, send command “UPDATE_TOFCOS” with control byte “0x02”: | 0xF5 | **0x45** | **0x02 0x00 0x00 0x00 0x00 0x00 0x00 0x00** | 0x69 0x85 0x52 0x7C | Bootloader sends acknowledge	Complete update: Verify data	 ACK
Note: If the command was executed correctly then the ACK response is followed by an additional response | **0xF8 0x65 0x73 0x700 0x72 0x6F 0x73 0x00** | This is an internal response which needs to be ignored.		
Bootloader enforces auto-reset. Wait until the end of the boot time.	Return to regular operation	---
The device is now ready to operate. Communication may be tested with the command “IDENTIFY”.	---	---

Table 24: Update procedure

Notes:

- If an error occurs (e.g. corrupted data, invalid command), the device answers with NACK.
- If the update procedure is interrupted, no valid TOFCOS is in the camera memory. Thus, the TOFcam-635 stays in bootloader mode. In such case, the update procedure must be restarted. It can be repeated as many times as needed.

14. Maintenance and disposal

14.1. Maintenance

The device does not need any maintenance. A functional check is recommended each time the device is taken into operation:

- Check the mounting position and the detection area of the sensor with respect to the operational conditions. Also check that there is no hazardous situation.
- From time to time, clean the lens with a soft towel like you clean your sunglasses. Never use any solvents for cleaning. THE DEVICE CAN BE DESTROYED!

14.2. Disposal

Disposal should be done using the most up-to-date recycling technologies for electronic components according to the local regulations and laws. The design and manufacture of the cameras and components are done in compliance with the RoHS legal regulations. Traces of dangerous materials may be found in the electronic components, but not in harmful quantities.

15. Addendum

15.1. Related documents

Data sheet epc635, ESPROS Photonics Corp.

Book 3D-TOF, A guideline to 3D-TOF sensors that work by ESPROS Photonics Corp. (author Beat Dede Coi et. al.)

15.2. Links

www.espros.com

www.doxygen.nl

www.graphwiz.org

www.opencv.org - OpenCV (OpenSource Computer Vision)

www.pdal.io - Point Data Abstraction Library (PDAL)

www.pointcloud.org - Point Cloud Library (PCL)

www.qt.io – Application development framework (QT)

www.ros.org - Robot Operating System (ROS)

http://wiki.ros.org - ROS documentation

15.3. Licenses

We appreciate the use of the following open source or free software in our tools and respect the large amount of work the owners have done:

Tool	Internet address	License holder
Doxygen	www.doxygen.nl	Copyright (C) 1997 … 2018 Dimitry van Heesch
Graphviz	www.graphviz.org	Copyright (C) AT&T Labs Research
Qt-5	www.qt.io	Copyright (C) 2018 The Qt Company
ROS	www.ros.org	Open Source Robotics Foundation

Table 25: Licensed open sources used

All rights reserved by the owners.

THIS SOFTWARE IS PROVIDED BY THE COPYRIGHT HOLDERS AND CONTRIBUTORS "AS IS" AND ANY EXPRESS OR IMPLIED WARRANTIES, INCLUDING, BUT NOT LIMITED TO, THE IMPLIED WARRANTIES OF MERCHANTABILITY AND FITNESS FOR A PARTICULAR PURPOSE ARE DISCLAIMED. IN NO EVENT SHALL THE COPYRIGHT HOLDER OR CONTRIBUTORS BE LIABLE FOR ANY DIRECT, INDIRECT, INCIDENTAL, SPECIAL, EXEMPLARY, OR CONSEQUENTIAL DAMAGES (INCLUDING, BUT NOT LIMITED TO, PROCUREMENT OF SUBSTITUTE GOODS OR SERVICES; LOSS OF USE, DATA, OR PROFITS; OR BUSINESS INTERRUPTION) HOWEVER CAUSED AND ON ANY THEORY OF LIABILITY, WHETHER IN CONTRACT, STRICT LIABILITY, OR TORT (INCLUDING NEGLIGENCE OR OTHERWISE) ARISING IN ANY WAY OUT OF THE USE OF THIS SOFTWARE, EVEN IF ADVISED OF THE POSSIBILITY OF SUCH DAMAGE.

16. IMPORTANT NOTICE

ESPROS Photonics AG and its subsidiaries (ESPROS) reserve the right to make corrections, modifications, enhancements, improvements, and other changes to its products, documentations and services at any time and to discontinue any product or service without notice. Customers should obtain the latest relevant information before placing orders and should verify that such information is current and complete. All products are sold subject to ESPROS' terms and conditions of sale supplied at the time of order acknowledgment.

ESPROS warrants performance of its hardware products to the specifications applicable at the time of sale in accordance with ESPROS' standard warranty. Testing and other quality control techniques are used to the extent ESPROS deems necessary to support this warranty. Except where mandated by government requirements, testing of all parameters of each product is not necessarily performed.

ESPROS assumes no liability for applications assistance or customer product design. Customers are responsible for their products and applications using ESPROS components. To minimize the risks associated with customer products and applications, customers should provide adequate design and operating safeguards.

ESPROS does not warrant or represent that any license, either express or implied, is granted under any ESPROS patent right, copyright, mask work right, or other ESPROS intellectual property right relating to any combination, machine, or process in which ESPROS products or services are used. Information published by ESPROS regarding third-party products or services does not constitute a license from ESPROS to use such products or services or a warranty or endorsement thereof. Use of such information may require a license from a third party under the patents or other intellectual property of the third party, or a license from ESPROS under the patents or other intellectual property of ESPROS.

Resale of ESPROS products or services with statements different from or beyond the parameters stated by ESPROS for that product or service voids all express and any implied warranties for the associated ESPROS product or service. ESPROS is not responsible or liable for any such statements.

ESPROS products are not authorized for use in safety-critical applications (such as life support) where a failure of the ESPROS product would reasonably be expected to cause severe personal injury or death, unless officers of the parties have executed an agreement specifically governing such use. Buyers represent that they have all necessary expertise in the safety and regulatory ramifications of their applications, and acknowledge and agree that they are solely responsible for all legal, regulatory and safety-related requirements concerning their products and any use of ESPROS products in such safety-critical applications, notwithstanding any applications-related information or support that may be provided by ESPROS. Further, Buyers must fully indemnify ESPROS and its representatives against any damages arising out of the use of ESPROS products in such safety-critical applications.

ESPROS products are neither designed nor intended for use in military/aerospace applications or environments unless the ESPROS products are specifically designated by ESPROS as military-grade. Only products designated by ESPROS as military-grade meet military specifications. Buyers acknowledge and agree that any such use of ESPROS products which ESPROS has not designated as military-grade is solely at the Buyer's risk, and that they are solely responsible for compliance with all legal and regulatory requirements in connection with such use.

ESPROS products are neither designed nor intended for use in automotive applications or environments unless the specific ESPROS products are designated by ESPROS as compliant with ISO/TS 16949 requirements. Buyers acknowledge and agree that, if they use any non-designated products in automotive applications, ESPROS will not be responsible for any failure to meet such requirements.