# Product data sheet

Specifications



## Circuit breaker, PowerPacT P, 800A, 3 pole, 600VAC, 25kA, lugs, Micrologic 5.0A, 80%

PJL36080U43A

**Product availability: Non-Stock - Not normally stocked in distribution facility**

## Main

| | |
|---|---|
| **Range** | PowerPact |
| **Product name** | PowerPact P |
| **Product or Component Type** | Circuit breaker |
| **Device Application** | Distribution |

## Complementary

| | |
|---|---|
| **Line Rated Current** | 800 A |
| **Number of Poles** | 3P |
| **Control Type** | Toggle |
| **Breaking capacity code** | J |
| **Breaking capacity** | AIR 100 kA 240 V AC 50/60 Hz UL 489<br>AIR 65 kA 480 V AC 50/60 Hz UL 489<br>AIR 25 kA 600 V AC 50/60 Hz UL 489<br>Icu 65 kA 240 V AC 50/60 Hz IEC 60947-2<br>Icu 50 kA 380/415 V AC 50/60 Hz IEC 60947-2 |
| **[Ue] rated operational voltage** | 600 V AC 50/60 Hz UL 489 |
| **Network Frequency** | 50/60 Hz |
| **[Ics] rated service breaking capacity** | 35 kA 240 V AC 50/60 Hz IEC 60947-2<br>25 kA 380/415 V AC 50/60 Hz IEC 60947-2 |
| **[Uimp] rated impulse withstand voltage** | 8 kV IEC 60947-2 |
| **Trip unit technology** | Electronic, ammeter, MicroLogic 5.0 A, LSI |
| **Continuous current rating** | 80 % |
| **[Ui] rated insulation voltage** | 750 V IEC 60947-2 |
| **Trip unit name** | MicroLogic 5.0 A |
| **AWG gauge** | 3 x AWG 3/0...500 kcmil aluminium/copper |
| **Local signalling** | Overload 1 1 LED amber)<br>1 flag green)<br>Trip causes 4 trip indicator red) |
| **Mounting mode** | Unit mount lug) |
| **Mounting Support** | Lug |
| **Electrical connection** | Lugs, line<br>Lugs, load |
| **Terminal identifier** | AL800M23K |
| **Long time pick-up adjustment range** | 0.4...1 x Ir |

Price is “List Price” and may be subject to a trade discount – check with your local distributor or retailer for actual price.

Disclaimer: This documentation is not intended as a substitute for and is not to be used for determining suitability or reliability of these products for specific user applications

| | |
|---|---|
| **Tightening torque** | 442.5 lbf.in (50 N.m) 0.1…0.4 in² (95…240 mm²) (3 x AWG 3/0...500 kcmil)<br>8.9…11.5 lbf.in (1.0…1.3 N.m) |
| **Number of slots** | 2 auxiliary switch OF plug-in)<br>1 alarm switch SD plug-in)<br>1 overcurrent trip switch SDE plug-in)<br>1 voltage release MN or MX plug-in) |
| **Power wire stripping length** | 1.0 in (25 mm) |
| **Height** | 12.86 in (326.64 mm) |
| **Width** | 8.27 in (210.06 mm) |
| **Depth** | 8.05 in (204.47 mm) |
| **Net Weight** | 32 lb(US) (14.5 kg) |
| **Quantity per Set** | 1 |
| **Circuit breaker application** | HACR rated |

## Environment

| | |
|---|---|
| **Quality labels** | CE |
| **Standards** | UL<br>CSA<br>NEMA<br>NOM-003-SCFI-2000<br>IEC 60947-2 |
| **Product certifications** | UL<br>CSA<br>NOM |
| **IP degree of protection** | Front cover IP40 |
| **Pollution degree** | 3 IEC 60947-1 |
| **Ambient air temperature for operation** | -13…158 °F (-25…70 °C) |
| **Ambient Air Temperature for Storage** | -58…185 °F (-50…85 °C) |
| **Operating altitude** | < 6561.68 ft (2000 m) without derating<br>13123.36 ft (4000 m) with derating |

## Ordering and shipping details

| | |
|---|---|
| **Category** | US10DE201215 |
| **Discount Schedule** | 0DE2 |
| **GTIN** | 785901497653 |
| **Returnability** | Yes |
| **Country of origin** | US |

## Packing Units

| | |
|---|---|
| **Unit Type of Package 1** | PCE |
| **Nbr. of units in pkg.** | 1 |
| **Package 1 Height** | 11.75 in (29.845 cm) |
| **Package 1 Width** | 11.63 in (29.528 cm) |
| **Package 1 Length** | 20.25 in (51.435 cm) |
| **Package weight(Lbs)** | 32.0001 lb(US) (14.515 kg) |

## Contractual warranty

| | |
|---|---|
| **Warranty** | 18 months |

## Environmental Data

Schneider Electric aims to achieve Net Zero status by 2050 through supply chain partnerships, lower impact materials, and circularity via our ongoing “Use Better, Use Longer, Use Again” campaign to extend product lifetimes and recyclability.

Environmental Data explained >

How we assess product sustainability >

### Environmental footprint

| | |
|---|---|
| Carbon footprint (kg CO2 eq, Total Life cycle) | 1151 |
| Environmental Disclosure | Product Environmental Profile |

## Use Better

### Materials and Substances

| | |
|---|---|
| Packaging made with recycled cardboard | Yes |
| Packaging without single use plastic | No |
| EU RoHS Directive | Compliant with Exemptions |
| REACh Regulation | REACh Declaration |
| California proposition 65 | WARNING: This product can expose you to chemicals including: DINP, which is known to the State of California to cause cancer, and DIDP, which is known to the State of California to cause birth defects or other reproductive harm. For more information go to www.P65Warnings.ca.gov |
| PVC free | Yes |

## Use Again

### Repack and remanufacture

| | |
|---|---|
| Circularity Profile | End of Life Information |
| Removable battery | Yes |
| Take-back | No |

Technical Illustration

## Dimensions

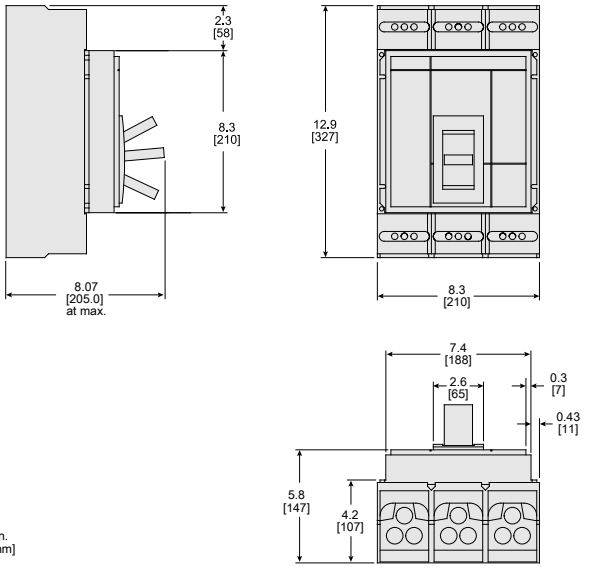


ALL DIMENSIONS ARE APPROXIMATE.
REFER TO TECHNICAL DRAWINGS AND DOCUMENTATION FOR COMPLETE INFORMATION.