CUDEVICES

MODEL: PJ-006B-SMT-TR | **DESCRIPTION:** DC POWER JACK

FEATURES

- 2.5mm center pin
- 4 A rating
- vertical orientation
- surface mount (SMT)

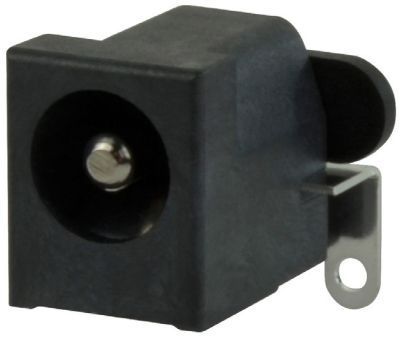

RoHS

SPECIFICATIONS

parameter	conditions/description	min	typ	max	units
rated input voltage			18		Vdc
rated input current				4	A
contact resistance[1]	between terminal and mating plug between terminal in a closed circuit			50 30	mΩ mΩ
insulation resistance	at 500 Vdc	100			MΩ
voltage withstand	at 50/60Hz for 1 minute			500	Vac
insertion/withdrawal force		0.3		3	kg
terminal strength	any direction for 10 seconds			500	g
operating temperature		-25		85	°C
life			5,000		cycles
flammability rating	UL94V-0				
RoHS	yes				

Notes: 1. When measured at a current of less than 1 A.

SOLDERABILITY

parameter	conditions/description	min	typ	max	units
reflow soldering	see reflow profile		260	265	°C

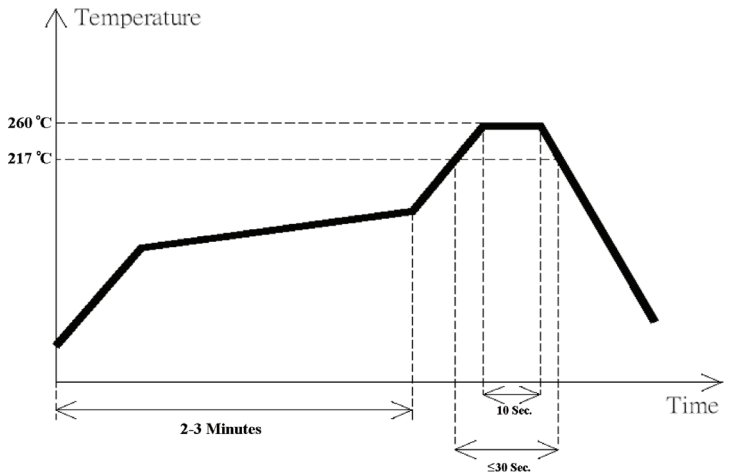

MECHANICAL DRAWING

units: mm[inches]
tolerance:
X.X ±0.3mm
X.XX ±0.2mm

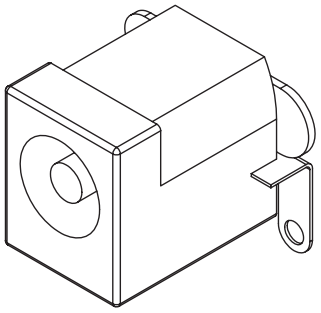

	MATERIAL	PLATING
center pin	copper alloy	nickel plated
terminal 1	copper alloy	silver plated
terminal 2	copper alloy	silver plated
terminal 3	copper alloy	silver plated
plastic (housing)	LCP	
plastic (bottom cover)	PA10T	

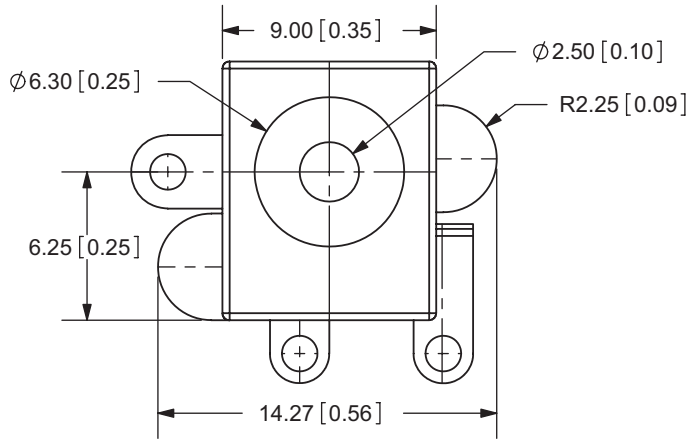

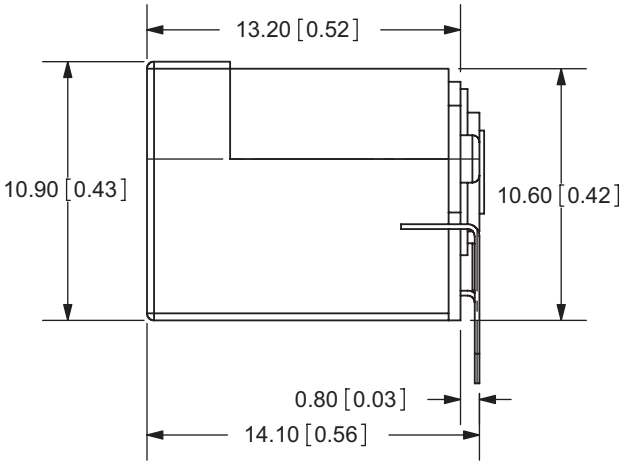

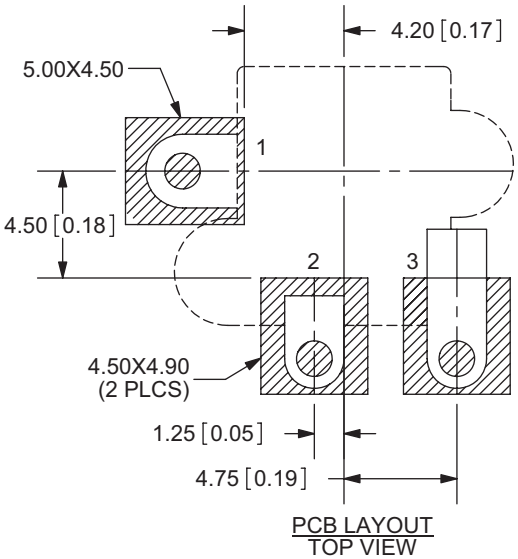

PCB LAYOUT
TOP VIEW

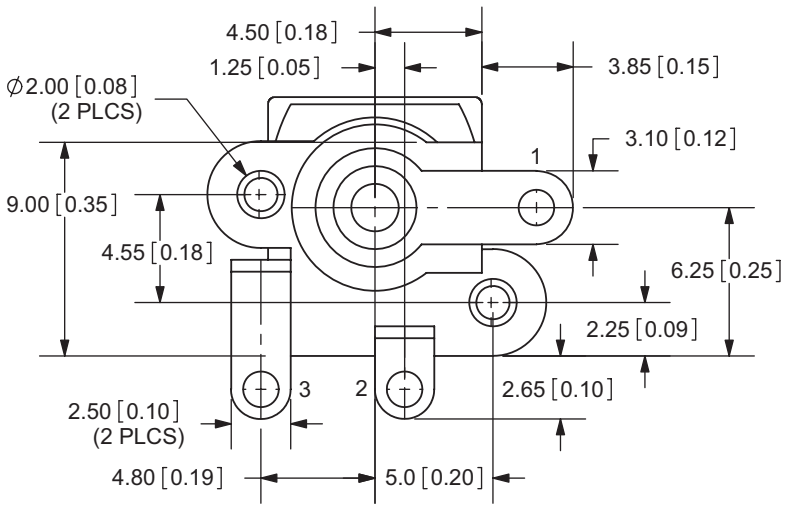

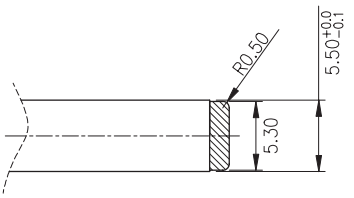

MATING PLUG
Jack Insertion Depth: 8.95mm

SCHEMATIC	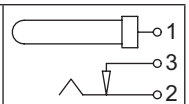
Model	PJ-006B-SMT
Center Pin	Ø2.5 mm

PACKAGING

units: mm

Reel Size: Ø380
Reel QTY: 250 pcs per reel

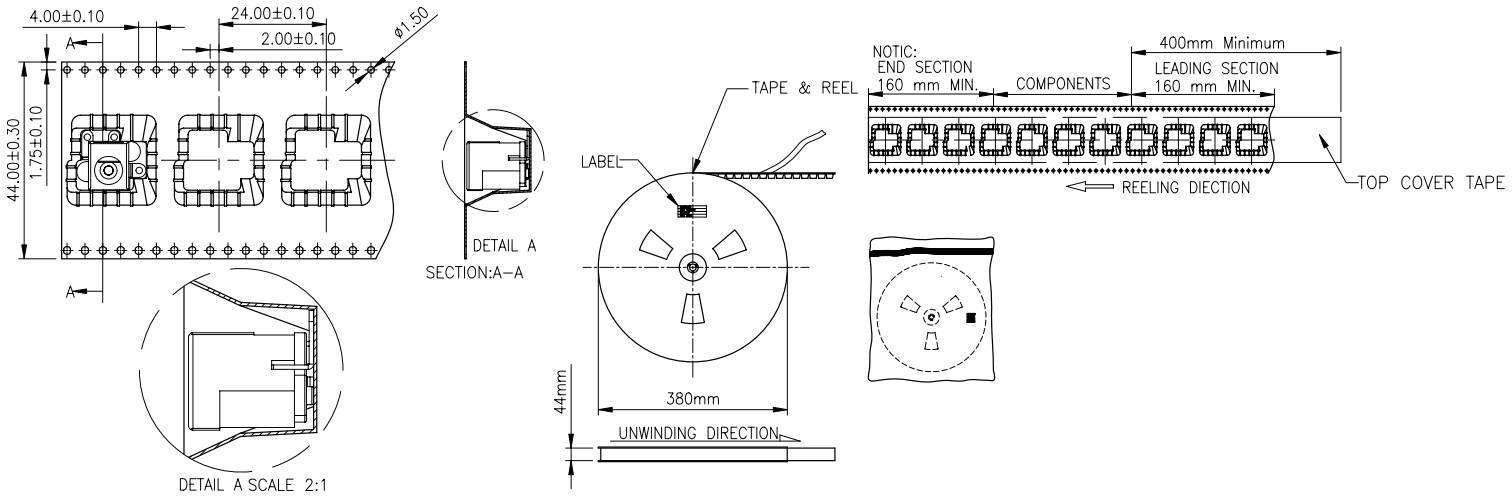

REVISION HISTORY

rev.	description	date
1.0	initial release	12/12/2005
1.01	added missing dimensions	10/18/2007
1.02	housing material changed	02/09/2011
1.03	added TR package option	11/07/2012
1.04	applied new spec template, updated rating	08/30/2013
1.05	brand update	10/31/2019
1.06	added tape and reel packaging drawings	09/04/2020
1.07	logo, datasheet style update	08/05/2022

The revision history provided is for informational purposes only and is believed to be accurate.

CUI Devices offers a one (1) year limited warranty. Complete warranty information is listed on our website.

CUI Devices reserves the right to make changes to the product at any time without notice. Information provided by CUI Devices is believed to be accurate and reliable. However, no responsibility is assumed by CUI Devices for its use, nor for any infringements of patents or other rights of third parties which may result from its use.

CUI Devices products are not authorized or warranted for use as critical components in equipment that requires an extremely high level of reliability. A critical component is any component of a life support device or system whose failure to perform can be reasonably expected to cause the failure of the life support device or system, or to affect its safety or effectiveness.

cuidevices.com