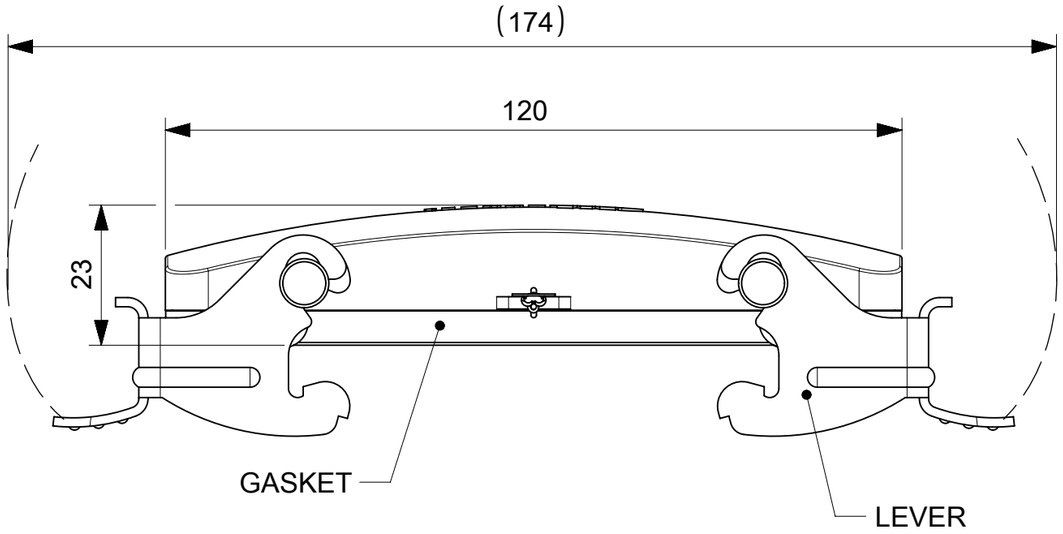

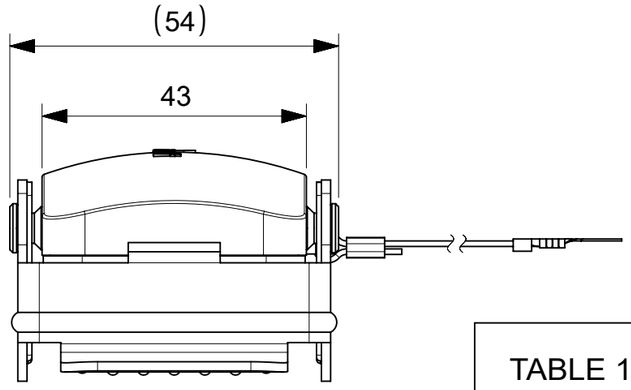

TABLE 1	PRODUCTS TABLE	
MATERIAL No.	Eng.No.	TYPE
0936013844	7824.6811.0	STD / STD-HV
0936013845	7824.6811.1	HE / HE-HV
0936013846	7824.6811.4	EMC

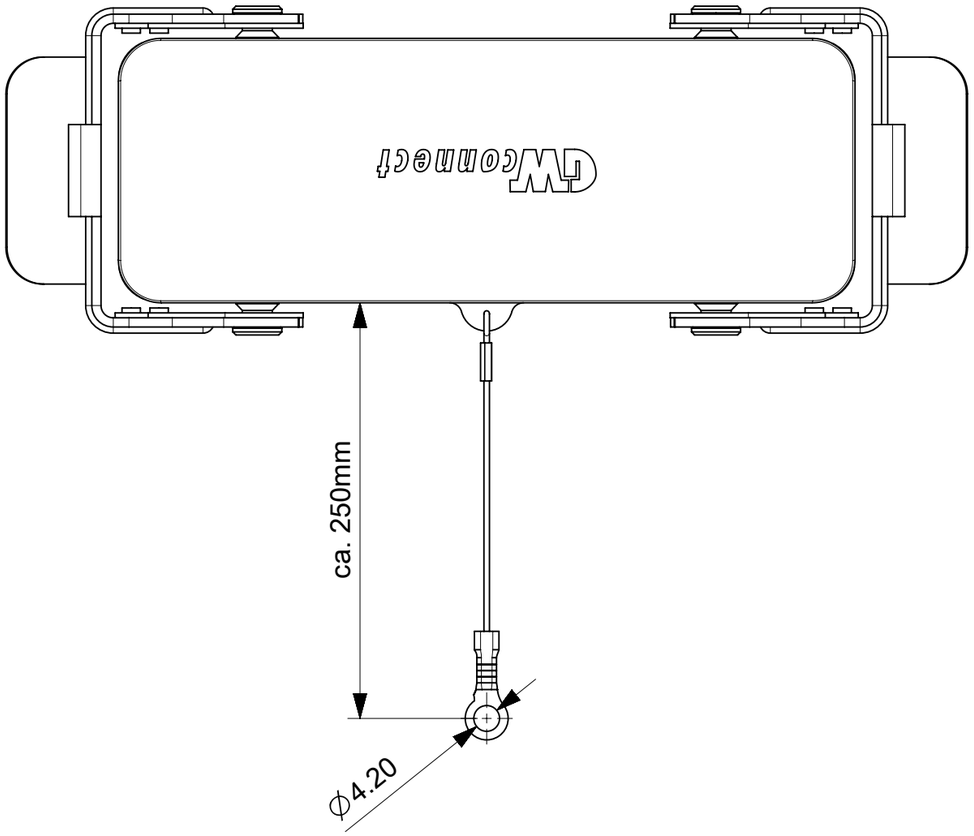

TABLE 2	PRODUCTS VERSION	
TYPE	DESCRIPTION	COLOR
STD	Standard version	Grey RAL 7037
STD-HV	Standard version for High Voltage inserts	
HE	Hars Enviromental version	Black RAL 9005
HE-HV	Hars Enviromental version for High Voltage inserts	
EMC	Electromagnetic compatibility version	Aluminum

THIS DRAWING CONTAINS INFORMATION THAT IS PROPRIETARY TO MOLEX ELECTRONIC TECHNOLOGIES, LLC AND SHOULD NOT BE USED WITHOUT WRITTEN PERMISSION

DIMENSION UNITS	SCALE
mm	1:1

GENERAL TOLERANCES (UNLESS SPECIFIED)

ANGULAR TOL	± 0.5 °
4 PLACES	±
3 PLACES	±
2 PLACES	±
1 PLACE	± 0.1
0 PLACES	± 0.3

DRAFT WHERE APPLICABLE MUST REMAIN WITHIN DIMENSIONS

CURRENT REV DESC:

EC NO: 659372
DRWN: VHANDI 2019/11/18
CHK'D: DMERONI 2021/03/22
APPR: MBIZZOZERO 2021/03/27

INITIAL REVISION:
DRWN: VHANDI 2019/11/18
APPR: MBIZZOZERO 2021/03/27

molex

24B COVER WITH GASKET, 2 LEVERS SERIES

PRODUCT CUSTOMER DRAWING

DOCUMENT NUMBER	DOC TYPE	DOC PART	REVISION
936013844	PSD	000	A

FIRST ANGLE PROJECTION	DRAWING	SERIES	MATERIAL NUMBER	CUSTOMER	SHEET NUMBER
	A3-SIZE	93601	SEE TABLE 1	GENERAL MARKET	1 OF 1

DOCUMENT STATUS	P1	RELEASE DATE	2021/03/27 16:32:57

FORMAT: tb-prod-A3
REVISION: H
DATE: 2018/01/18