Data sheet | Item number: 769-1613

Strain relief housing; for female and male connectors; 2 parts; Pin spacing 5 mm; 13-pole; gray

www.wago.com/769-1613

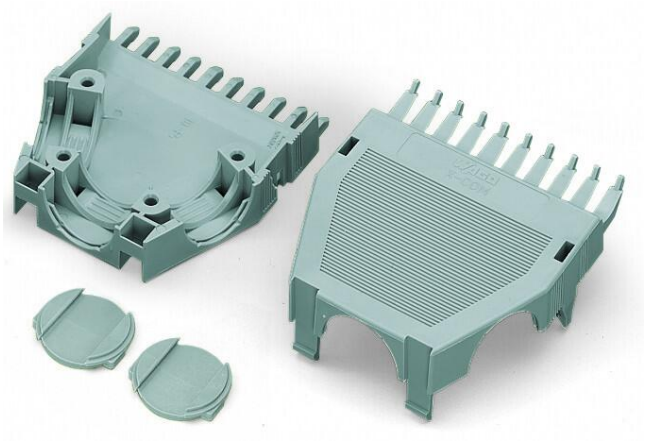

Picture differs from the item.

Color:

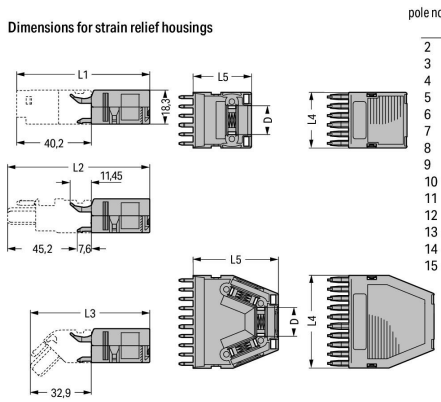

pole no.	L1	L2	L3	L4	L5	D
2	71.7	76.7	64.4	10	31.5	5
3	71.7	76.7	64.4	15	31.5	9.7
4	71.7	76.7	64.4	20	31.5	14
5	71.7	76.7	64.4	25	31.5	14
6	71.7	76.7	64.4	30	31.5	15.5
7	77.7	81.7	69.4	35	36.5	15.5
8	86.2	91.2	78.9	40	46	15.5
9	86.2	91.2	78.9	45	46	15.5
10	86.2	91.2	78.9	50	46	15.5
11	86.2	91.2	78.9	55	46	15.5
12	86.2	91.2	78.9	60	46	15.5
13	86.2	91.2	78.9	65	46	15.5
14	86.2	91.2	78.9	70	46	15.5
15	86.2	91.2	78.9	75	46	15.5

Dimensions in mm

Dimensions in mm

Data

Connection data

Connection 1

Pole number	13

Physical data

Width	65 mm / 2.559 inches
Height	18.3 mm / 0.72 inches
Depth	46 mm / 1.811 inches

Material data

Note (material data)	Information on material specifications can be found here

Subject to changes. Please also observe the further product documentation!

WAGO GmbH & Co. KG
Hansastr. 27
32423 Minden
Phone: +49571 887-0 | Fax: +49571 887-169
Email: info.de@wago.com | Web: www.wago.com

Do you have any questions about our products?
We are always happy to take your call at +49 (571) 887-44222.

Color	gray
Fire load	0.58 MJ
Weight	15.5 g

Commercial data

Product Group	18 (X-COM-System)
eCl@ss 10.0	27-14-11-92
eCl@ss 9.0	27-14-11-92
ETIM 8.0	EC002848
ETIM 7.0	EC002848
ECCN	NO DATA
PU (SPU)	25 pcs
Packaging type	box
Country of origin	DE
GTIN	4017332728195
Customs tariff number	39269097900

Environmental Product Compliance

RoHS Compliance Status	Compliant,No Exemption

Optional accessories

Mounting

Mounting accessories

Item no.: 209-173
Fixing screw; for cable clamp; 7 or more poles
www.wago.com/209-173

Item no.: 209-174
Cable clamp; for strain relief; 7 or more poles
www.wago.com/209-174

Marking accessories

Marker

Item no.: 209-501/000-007
WSB marking card; as card; not stretchable; plain; snap-on type; gray
www.wago.com/209-501/000-007

Item no.: 209-501/000-012
WSB marking card; as card; not stretchable; plain; snap-on type; orange
www.wago.com/209-501/000-012

Subject to changes. Please also observe the further product documentation!

WAGO GmbH & Co. KG
Hansastr. 27
32423 Minden
Phone: +49571 887-0 | Fax: +49571 887-169
Email: info.de@wago.com | Web: www.wago.com

Do you have any questions about our products?
We are always happy to take your call at +49 (571) 887-44222.

Item no.: 209-501/000-024
WSB marking card; as card; not stretchable; plain; snap-on type; violet
www.wago.com/209-501/000-024

Item no.: 209-501/000-023
WSB marking card; as card; not stretchable; plain; snap-on type; green
www.wago.com/209-501/000-023

Item no.: 209-501/000-017
WSB marking card; as card; not stretchable; plain; snap-on type; light green
www.wago.com/209-501/000-017

Item no.: 209-501
WSB marking card; as card; not stretchable; plain; snap-on type; white
www.wago.com/209-501

Item no.: 209-501/000-006
WSB marking card; as card; not stretchable; plain; snap-on type; blue
www.wago.com/209-501/000-006

Item no.: 209-501/000-005
WSB marking card; as card; not stretchable; plain; snap-on type; red
www.wago.com/209-501/000-005

Item no.: 209-501/000-002
WSB marking card; as card; not stretchable; plain; snap-on type; yellow
www.wago.com/209-501/000-002

Downloads

Documentation

Bid Text

769-1613 X81 - Datei	2019 年2月19 日	xml 2.7 kB	Download
769-1613 doc - Datei	2017 年5月23 日	doc 23.6 kB	Download

Additional Information

Technical Section Technical explanations	pdf 2.3 MB	Download

Subject to changes. Please also observe the further product documentation!

WAGO GmbH & Co. KG
Hansastr. 27
32423 Minden
Phone: +49571 887-0 | Fax: +49571 887-169
Email: info.de@wago.com | Web: www.wago.com

Do you have any questions about our products?
We are always happy to take your call at +49 (571) 887-44222.

CAD/CAE-Data

CAE data

EPLAN Data Portal 769-1613	URL	Download
WSCAD Universe 769-1613	URL	Download
ZUKEN Portal 769-1613	URL	Download

CAD data

2D/3D Models 769-1613	URL	Download

Asset Administration Shell

Asset Administration Shell 769-1613	URL	Download

Environmental Product Compliance

Compliance Search

Environmental Product Compliance 769-1613 Strain relief housing; for female and male connectors; 2 parts; Pin spacing 5 mm; 13-pole; gray	URL	Download

Installation Notes

Installation

WAGO GmbH & Co. KG
Hansastr. 27
32423 Minden
Phone: +49571 887-0 | Fax: +49571 887-169
Email: info.de@wago.com | Web: www.wago.com

Do you have any questions about our products?
We are always happy to take your call at +49 (571) 887-44222.

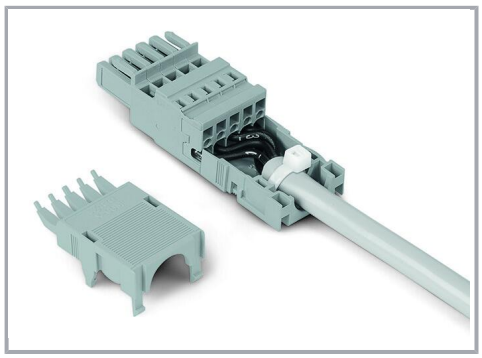

2- to 5-pole strain relief housings feature one cable outlet (rear side).
6- to 7-pole strain relief housings feature one cable outlet (rear side).
8- to 9-pole strain relief housings feature two cable outlets and one cover.
10- to 16-pole strain relief housings feature three cable outlets and two covers.

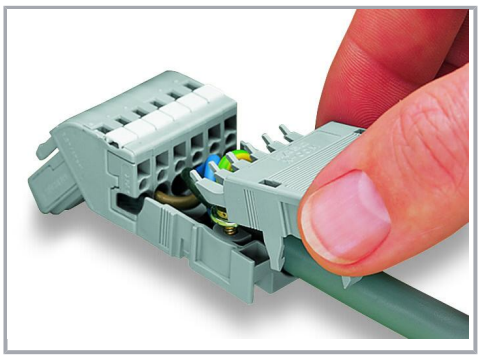

Snapping on a strain relief housing.

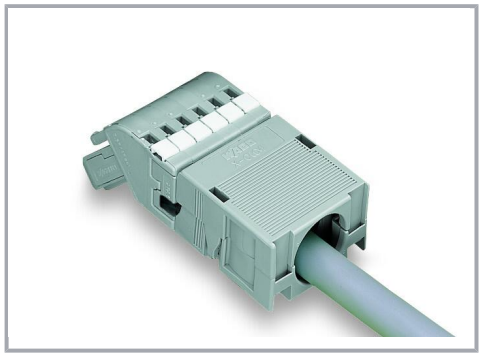

Snap-on type strain relief housing, consists of strain relief support and housing, 6-pole and 1-conductor female plugs, angled, 6-pole

Application

WAGO GmbH & Co. KG
Hansastr. 27
32423 Minden
Phone: +49571 887-0 | Fax: +49571 887-169
Email: info.de@wago.com | Web: www.wago.com

Do you have any questions about our products?
We are always happy to take your call at +49 (571) 887-44222.

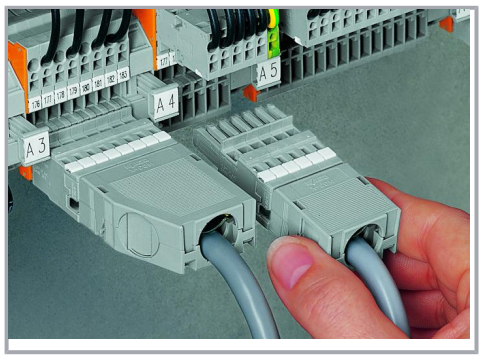

Application
Snap-on type strain relief housings for 769 Series

Subject to changes. Please also observe the further product documentation!

WAGO GmbH & Co. KG
Hansastr. 27
32423 Minden
Phone: +49571 887-0 | Fax: +49571 887-169
Email: info.de@wago.com | Web: www.wago.com

Do you have any questions about our products?
We are always happy to take your call at +49 (571) 887-44222.