Data Sheet | Item Number: 810-901/000-001

Multi port device tap; 2 trunk cables (input, output); 2 drop cables

https://www.wago.com/810-901/000-001

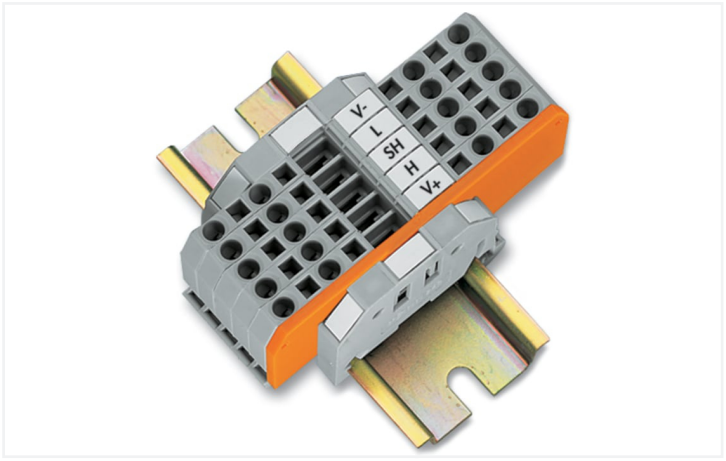

Similar to illustration

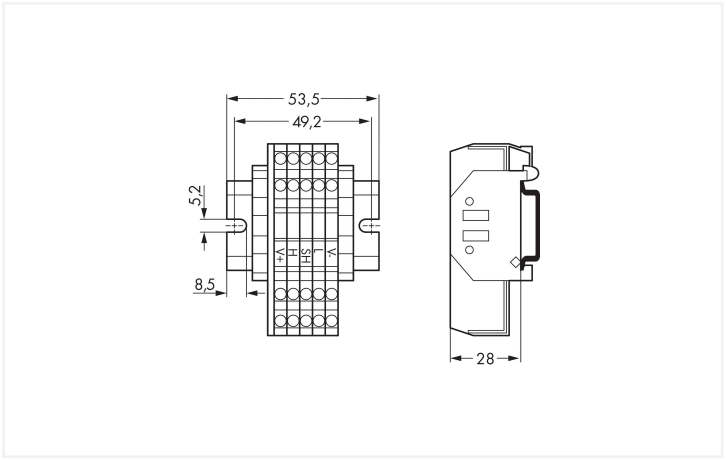

Dimensions in mm

Connection Data

Solid conductor	0.08 … 2.5 mm² / 28 … 12 AWG

Physical data

Width	53.5 mm / 2.106 inches
Height from upper-edge of DIN-rail	28 mm / 1.102 inches
Depth	75 mm / 2.953 inches

Material data

Fire load	0.964 MJ
Weight	78.4 g

Commercial data

Product Group	6 (INTERFACE ELECTRONIC)
PU (SPU)	1 pcs
Packaging type	Box
Country of origin	US
GTIN	4044918311885
Customs tariff number	85369010000

Product Classification

UNSPSC	39121421
eCl@ss 10.0	27-14-31-05
eCl@ss 9.0	27-14-31-05
ETIM 9.0	EC000635
ETIM 10.0	EC000635
ECCN	EAR99

Continued on next page

Environmental Product Compliance

RoHS Compliance Status	Compliant,No Exemption

Downloads

Environmental Product Compliance

Compliance Search			
Environmental Product Compliance 810-901/000-001			

Documentation

Bid Text			
810-901/000-001	19.02.2019	xml 3.30 KB	
810-901/000-001	05.03.2019	docx 16.46 KB	

CAD/CAE-Data

CAE data			
EPLAN Data Portal 810-901/000-001			
WSCAD Universe 810-901/000-001			