Data sheet



DFS60B-TJPZ00S07

DFS60

INCREMENTAL ENCODERS

SICK
Sensor Intelligence.



Illustration may differ

Ordering information

Type	part no.
DFS60B-TJPZ00S07	1100719

Other models and accessories ➜ www.sick.com/DFS60

Detailed technical data

Features

Special device	✓
Specialty	DFS60B-TJPZ00S06 (1100135) cable, universal, 0.5 m with M12 8-pin, additional accessories included with delivery Customized label: 6028369 M12-8 pin female connector 2076219 8 mm collet 2076220 10 mm collet 2076221 12 mm collet 2076222 14 mm collet 2076223 15 mm collet Additional empty label to note the programming settings
Standard reference device	DFS60B-TJPK65536, 1036968

Safety-related parameters

$MTTF_D$ (mean time to dangerous failure)	300 years (EN ISO 13849-1) [1]

[1] This product is a standard product and does not constitute a safety component as defined in the Machinery Directive. Calculation based on nominal load of components, average ambient temperature 40 °C, frequency of use 8760 h/a. All electronic failures are considered hazardous. For more information, see document no. 8015532.

Performance

Pulses per revolution	10,000 [1]
Measuring step	90°, electric/pulses per revolution
Measuring step deviation at non binary number of lines	± 0.01°
Error limits	± 0.05°

[1] See maximum revolution range.

Interfaces

Communication interface	Incremental
Communication Interface detail	TTL / HTL
Factory setting	Factory setting: output level TTL
Number of signal channels	6-channel
Programmable/configurable	✓

[1] With mechanical zero pulse width.

Initialization time	32 ms, 30 ms [1]
Output frequency	≤ 600 kHz
Load current	≤ 30 mA
Power consumption	≤ 0.7 W (without load)

[1] With mechanical zero pulse width.

Electronics

Connection type	Special version
Connection type Detail	Cable, 8-wire, with male connector, M12, 8-pin, universal, 0.5 m
Supply voltage	4.5 ... 32 V
Reference signal, number	1
Reference signal, position	90°, electric, logically gated with A and B
Reverse polarity protection	✓
Short-circuit protection of the outputs	✓ [1] [2]

[1] Programming TTL with ≥ 5.5 V: short-circuit opposite to another channel or GND permissable for maximum 30 s.
[2] Programming HTL or TTL with < 5.5 V: short-circuit opposite to another channel, US or GND permissable for maximum 30 s.

Mechanics

Mechanical design	Through hollow shaft
Shaft diameter	5/8″
Weight	+ 0.2 kg
Shaft material	Stainless steel
Flange material	Aluminum
Housing material	Aluminum die cast
Start up torque	0.8 Ncm (+20 °C)
Operating torque	0.6 Ncm (+20 °C)
Permissible movement static	± 0.3 mm (radial) ± 0.5 mm (axial)
Permissible movement dynamic	± 0.1 mm (radial) ± 0.2 mm (axial)
Operating speed	≤ 6,000 min^{-1} [1]
Moment of inertia of the rotor	40 gcm^2
Bearing lifetime	3.6 x 10^10 revolutions
Angular acceleration	≤ 500,000 rad/s^2

[1] Allow for self-heating of 3.3 K per 1,000 rpm when designing the operating temperature range.

Ambient data

EMC	According to EN 61000-6-2 and EN 61000-6-3
Enclosure rating	IP65, Housing side, male connector (IEC 60529) [1] IP65, shaft side (IEC 60529)
Permissible relative humidity	90 % (Condensation not permitted)

[1] With mating connector fitted.
[2] Stationary position of the cable.
[3] Flexible position of the cable.

Operating temperature range	–40 °C ... +100 °C [2] –30 °C ... +100 °C [3]
Storage temperature range	–40 °C ... +100 °C, without package
Resistance to shocks	100 g, 6 ms (EN 60068-2-27)
Resistance to vibration	30 g, 10 Hz ... 2,000 Hz (EN 60068-2-6)

[1] With mating connector fitted.
[2] Stationary position of the cable.
[3] Flexible position of the cable.

Classifications

ECLASS 5.0	27270501
ECLASS 5.1.4	27270501
ECLASS 6.0	27270590
ECLASS 6.2	27270590
ECLASS 7.0	27270501
ECLASS 8.0	27270501
ECLASS 8.1	27270501
ECLASS 9.0	27270501
ECLASS 10.0	27270501
ECLASS 11.0	27270501
ECLASS 12.0	27270501
ETIM 5.0	EC001486
ETIM 6.0	EC001486
ETIM 7.0	EC001486
ETIM 8.0	EC001486
UNSPSC 16.0901	41112113

Dimensional drawing

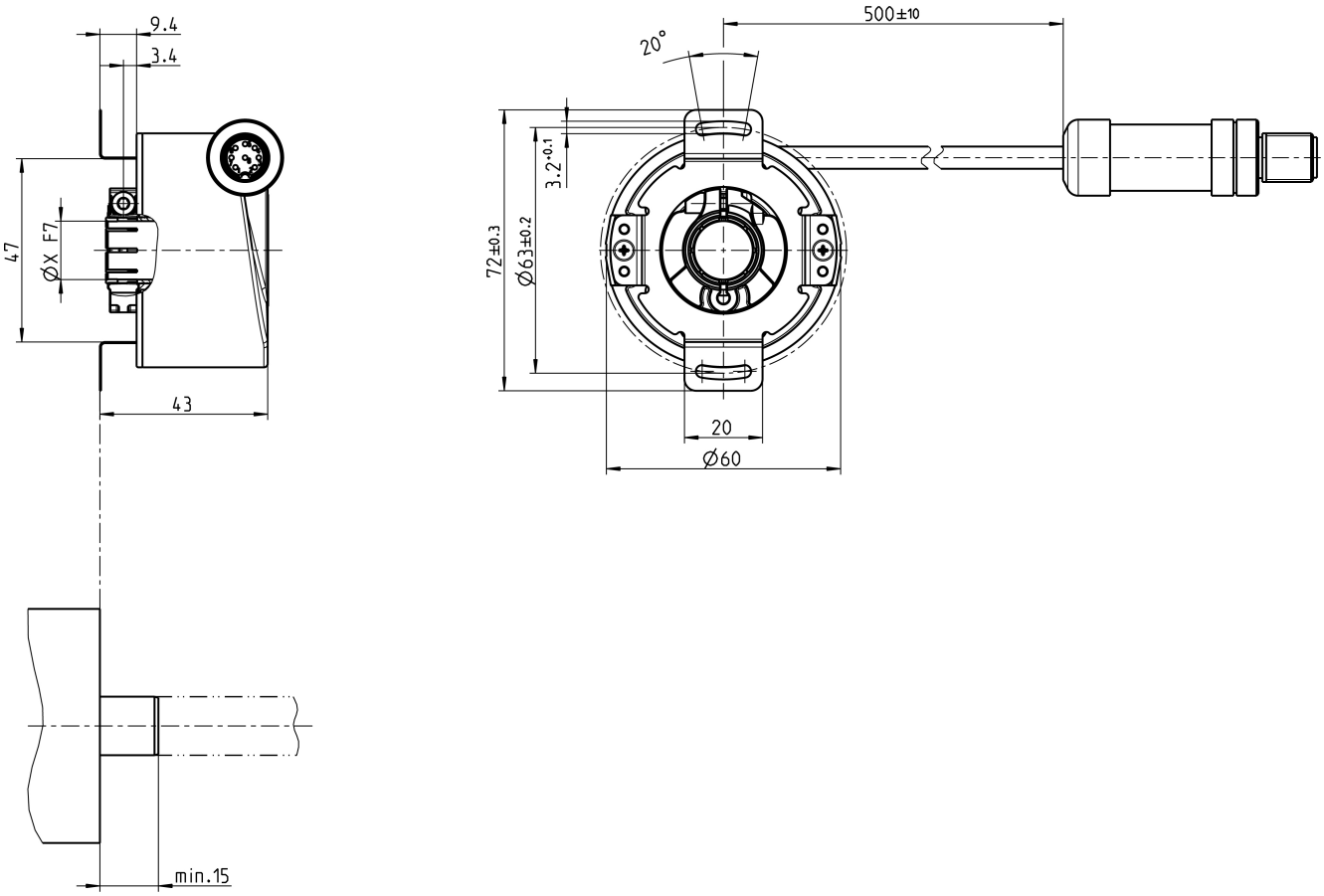

Dimensions in mm (inch)
6028369 Female Connector

Dimensional drawing

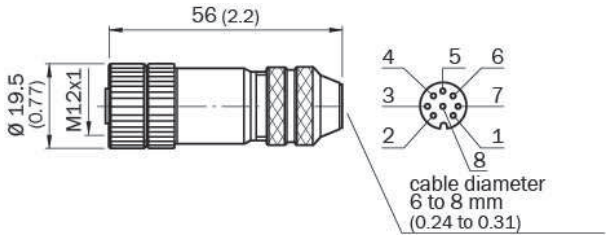

Dimensions in mm (inch)

Dimensional drawing 2076219, 2076220, 2076221, 2076222 collet

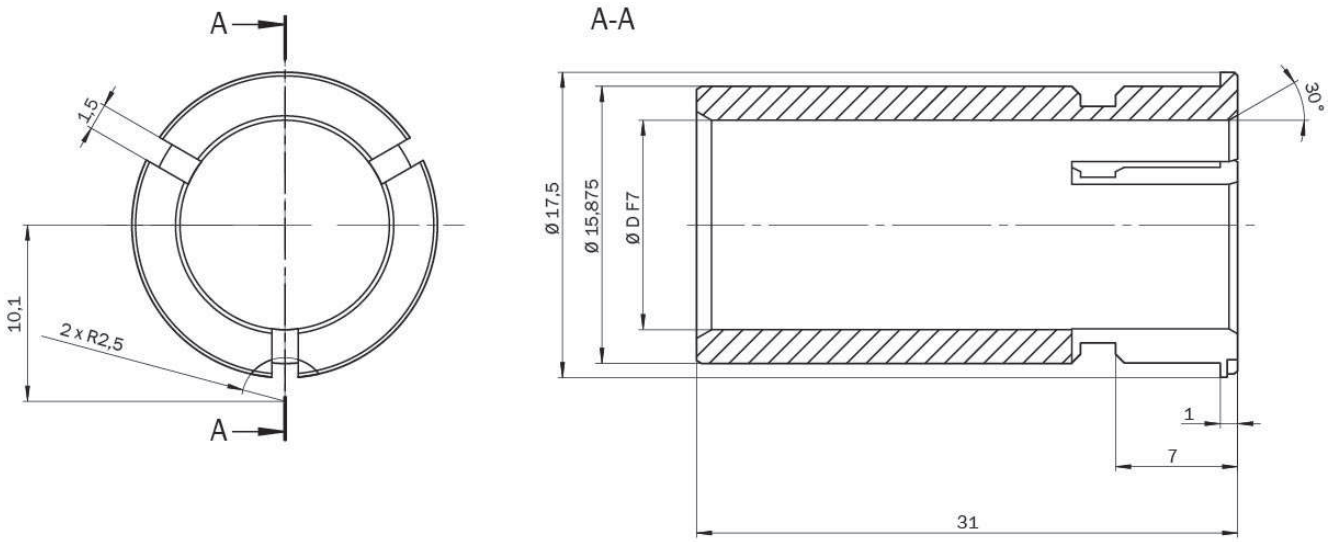

Ø D F7	Art.-Nr.
8	2076219
3/8″ (9,525)	2076224
10	2076220
11	2094671
12	2076221
1/2″ (12,7)	2076225
14	2076222

Dimensions in mm (inch)

Dimensional drawing 2076223 collet

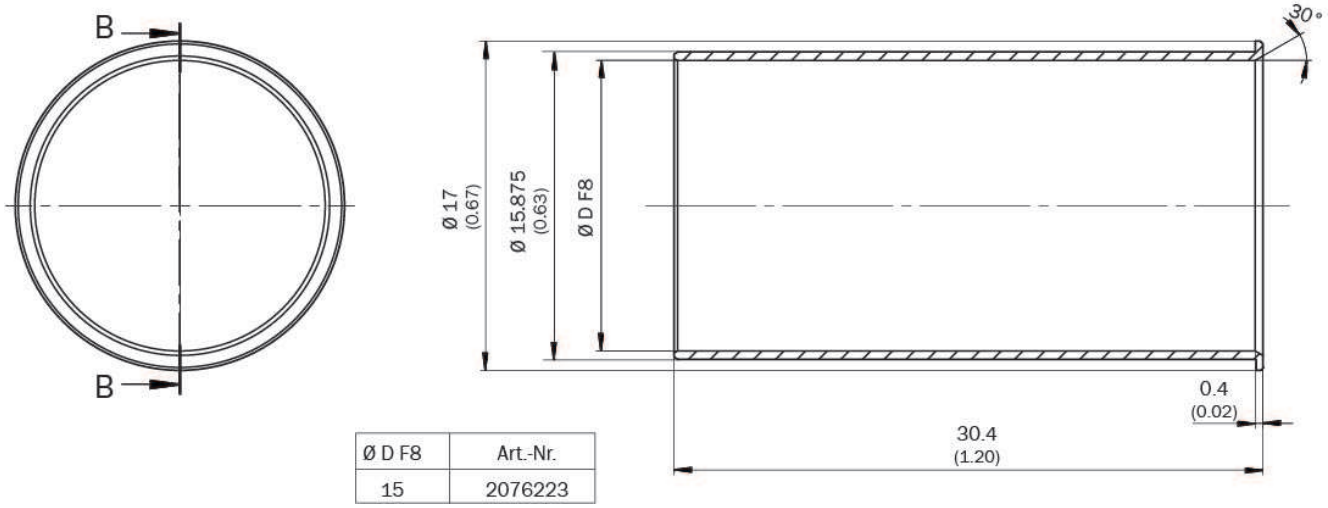

Ø D F8	Art.-Nr.
15	2076223

Dimensions in mm (inch)

PIN assignment

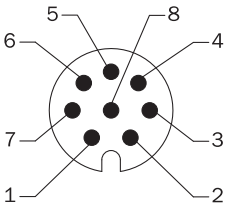

view of M12 male device connector on encoder

PINMale connector M12, 8-pin	PINMale connector M23, 12-pin	Wire colors (cable connection)	TTL/HTL signal	Sin/Cos 1.0 V_{PP}	Explanation
1	6	Brown	$\overline{A}$	COS-	Signal wire
2	5	White	A	COS+	Signal wire
3	1	Black	$\overline{B}$	SIN-	Signal wire
4	8	Pink	B	SIN+	Signal wire
5	4	Yellow	$\overline{Z}$	$\overline{Z}$	Signal wire
6	3	Purple	Z	Z	Signal wire
7	10	Blue	GND	GND	Ground connection
8	12	Red	$+U_S$	$+U_S$	Supply voltage
-	9	-	N.c.	N.c.	Not assigned
-	2	-	N.c.	N.c.	Not assigned
-	11	-	N.c.	N.c.	Not assigned
-	7 [1)]	Orange	0-SET [1)]	N.c.	Set zero pulse[1)]
Screen	Screen	Screen	Screen	Screen	Screen connected to housing on encoder side. Connected to ground on control side.

[1)] For electrical interfaces only: M, U, V, W with 0-SET function on PIN 7 on M23 plug. The 0-SET input is used to set the zero pulse to the current shaft position. If the 0-SET input is applied to US for longer than 250 ms after it has previously been open or applied to GND for at least 1,000 ms, the current shaft position is assigned zero pulse signal “Z”.

PIN assignment

Cable, 8-wire

View of M12 male device connector on encoder

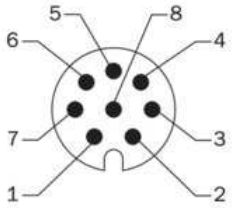

View of M23 male device connector on encoder

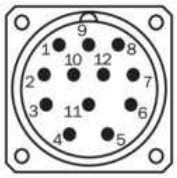

PIN, 8-pin, M12 male connector	PIN, 12-pin, M23 male connector	Color of the wires for encoders with cable outlet	TTL/HTL signal	Sin/cos 1.0 V_{ss}	Explanation
1	6	Brown	$\overline{A}$	COS–	Signal wire
2	5	White	A	COS+	Signal wire
3	1	Black	$\overline{B}$	SIN–	Signal wire
4	8	Pink	B	SIN+	Signal wire
5	4	Yellow	$\overline{Z}$	$\overline{Z}$	Signal wire
6	3	Violet	Z	Z	Signal wire
7	10	Blue	GND	GND	Ground connection of the encoder
8	12	Red	$+U_s$	$+U_s$	Supply voltage (volt-free to housing)
–	9	–	n.c.	n.c.	Not assigned
–	2	–	n.c.	n.c.	Not assigned
–	11	–	n.c.	n.c.	Not assigned
–	7 [1]	–	0-SET [1]	n.c.	Set zero pulse [1]
Screen	Screen	Screen	Screen	Screen	Screen connected to housing on encoder side. Connected to ground on control side.

[1] For electrical interfaces only: M, U, V, W with 0-SET function on PIN 7 on M23 male connector. The 0-SET input is used to set the zero pulse on the current shaft position. If the 0-SET input is connected to U_s for longer than 250 ms after it had previously been unassigned for at least 1,000 ms or had been connected to the GND, the current position of the shaft is assigned to the zero pulse signal "Z".

Type label



Sample Encoder label

maximum revolution range

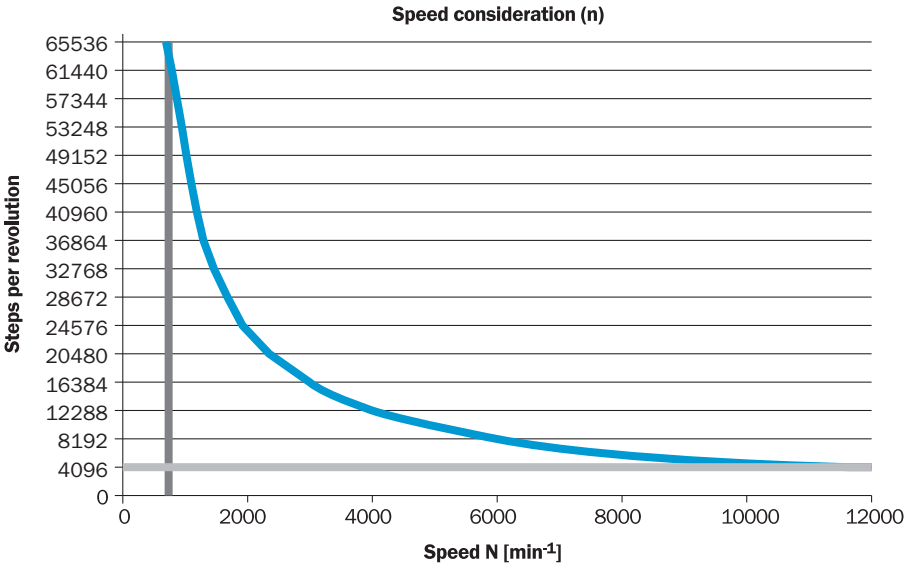

SICK AT A GLANCE

SICK is one of the leading manufacturers of intelligent sensors and sensor solutions for industrial applications. A unique range of products and services creates the perfect basis for controlling processes securely and efficiently, protecting individuals from accidents and preventing damage to the environment.

We have extensive experience in a wide range of industries and understand their processes and requirements. With intelligent sensors, we can deliver exactly what our customers need. In application centers in Europe, Asia and North America, system solutions are tested and optimized in accordance with customer specifications. All this makes us a reliable supplier and development partner.

Comprehensive services complete our offering: SICK LifeTime Services provide support throughout the machine life cycle and ensure safety and productivity.

For us, that is “Sensor Intelligence.”

WORLDWIDE PRESENCE:

Contacts and other locations –www.sick.com