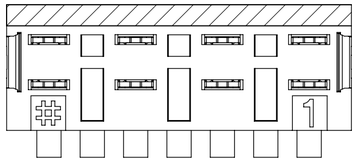

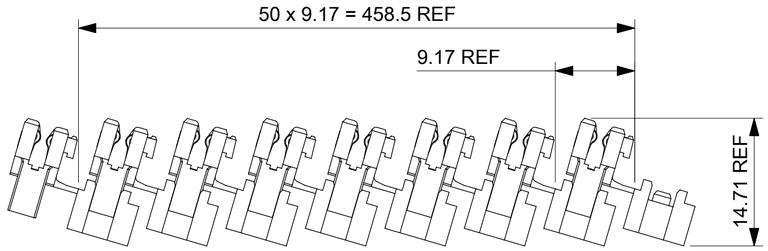

SHIPPING ARRANGEMENT

CCT	A	B
2	5.0	9.9
3	10.0	14.9
4	15.0	19.9
5	20.0	24.9
6	25.0	29.9
7	30.0	34.9
8	35.0	39.9

A1

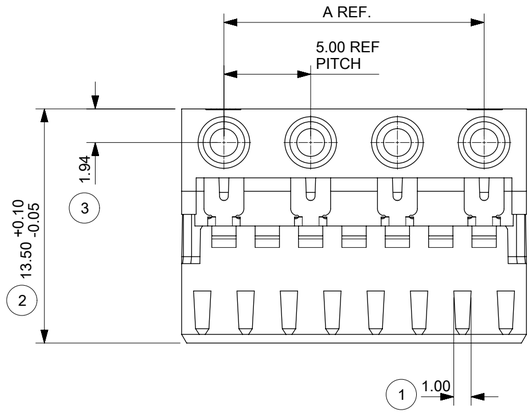

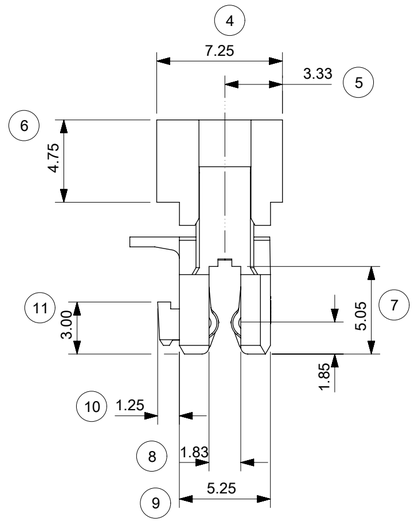

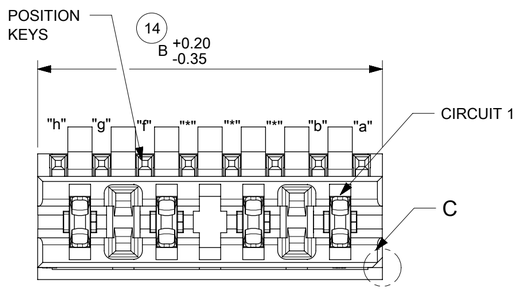

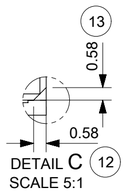

NOTES:
1. REFER TO PRODUCT SPECIFICATION: PS-93270-001.
2. MATERIAL: HOUSING - PA66
UL94-V0, COLOUR: BLACK.
TERMINAL: COPPER ALLOY 0.30 REF. THICK - PLATING
HOT TIN DIP.
3. COLOUR STRIPE IS OPTIONAL. AVAILABLE IN THE FOLLOWING
COLOURS: YELLOW, RED, GREEN, BLUE, BLACK & ORANGE.
4. REFER TO PACKAGING SPEC (PK-93270-001)
5. REFER TO APPLICATION SPEC (AS-93270-001)
LAST INSPECTION NUMBER : 14

DOCUMENT STATUS	P1	RELEASE DATE	2023/09/19 05:47:59

THIS DRAWING CONTAINS INFORMATION THAT IS PROPRIETARY TO MOLEX ELECTRONIC TECHNOLOGIES, LLC AND SHOULD NOT BE USED WITHOUT WRITTEN PERMISSION

DIMENSION UNITS	SCALE
mm	20:1

GENERAL TOLERANCES (UNLESS SPECIFIED)

ANGULAR TOL	±	0.5 °
4 PLACES	±	
3 PLACES	±	0.05
2 PLACES	±	0.1
1 PLACE	±	0.2
0 PLACES	±	

DRAFT WHERE APPLICABLE MUST REMAIN WITHIN DIMENSIONS

CURRENT REV DESC:

EC NO: 761927
DRWN: RAHULH3 2023/09/14
CHK'D: RAHULH3 2023/09/18
APPR: MRAMAKRISHNA 2023/09/19

INITIAL REVISION:
DRWN: MBN02 2022/05/30
APPR: MRAMAKRISHNA 2023/02/08

molex

R POWER 10 A, 0.75MM2 BLACK LATI
5MM TERMINAL PITCH (MATL: NYLON PA66)

PRODUCT CUSTOMER DRAWING

THIRD ANGLE PROJECTION	DRAWING	SERIES	MATERIAL NUMBER	CUSTOMER	SHEET NUMBER
	A2-SIZE	220958	SEE TABLE	GENERAL MARKET	1 OF 9

DOCUMENT NUMBER	DOC TYPE	DOC PART	REVISION
2209580001	PSD	000	A2

FORMAT: master-tb-prod-A2
REVISION: J1
DATE: 2021/05/01

SINGLE ROW CODING KEYS OPEN
END WALLS WITH LATCHES

END WALLS OPEN	
FIRST END WALL	LAST END WALL
OPEN	OPEN

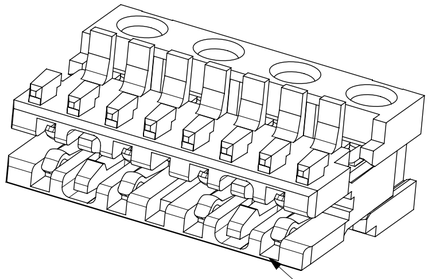

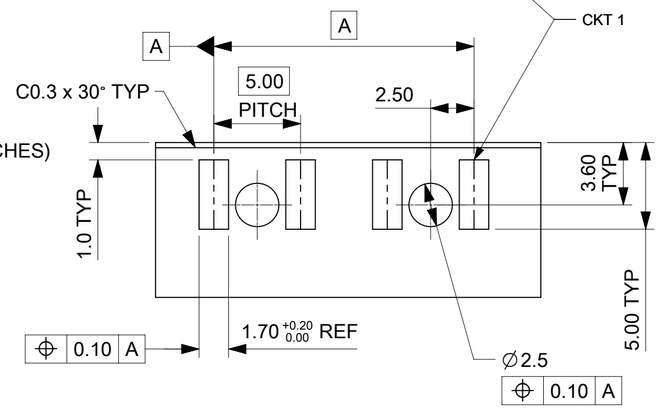

- PCB LAYOUT FOR 4CCT CONNECTOR
  (WITH NO OPTIONAL POSITIONAL RIB SLOT)
  (WITH HOLES FOR OPTIONAL INTERNAL LATCHES)
- RECOMMENDED PCB THICKNESS 1.5±0.14

SINGLE ROW CODING KEYS OPTION A
END WALLS WITH POLARIZING RIBS

OPTION A END WALLS	
FIRST END WALL	LAST END WALL
SHORT	CLOSED

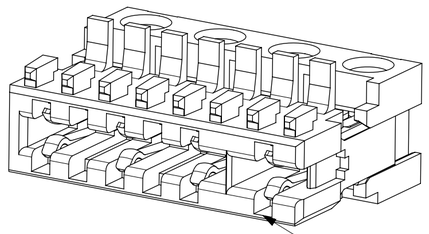

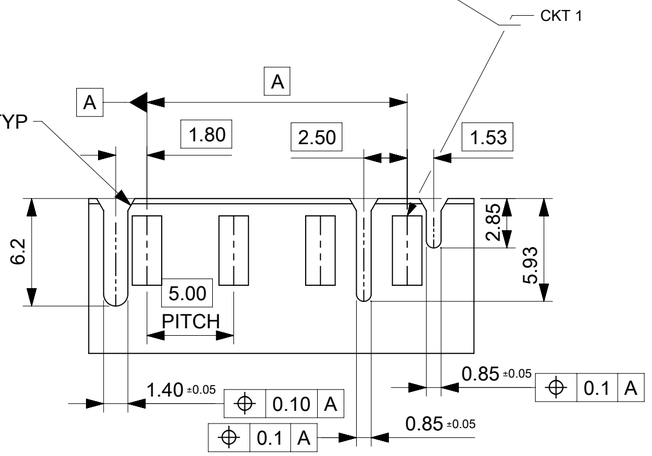

- PCB LAYOUT FOR 4CCT CONNECTOR
  (WITH OPTIONAL POSITIONAL RIB SLOT
  BETWEEN CCTS 1&2)
- RECOMMENDED PCB THICKNESS 1.5±0.14

2 ROW CODING KEYS OPTION B
END WALLS WITH POLARIZING RIBS

OPTION B END WALLS	
FIRST END WALL	LAST END WALL
CLOSED	SHORT

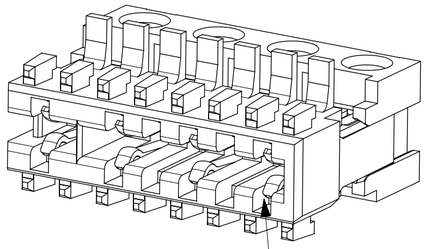

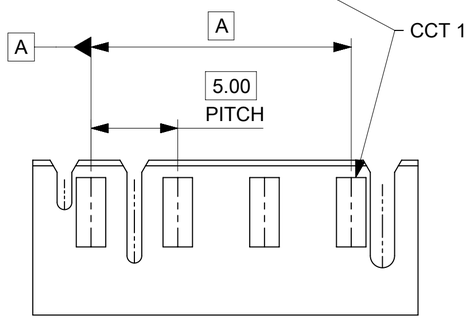

- PCB LAYOUT FOR 4CCT CONNECTOR
  (WITH OPTIONAL POSITIONAL RIB SLOT
  BETWEEN CCTS 3&4)
- RECOMMENDED PCB THICKNESS 1.5±0.14

1 ROW CODING KEYS OPTION C
END WALLS WITH POLARIZING RIBS

OPTION C END WALLS	
FIRST END WALL	LAST END WALL
OPEN	CLOSED

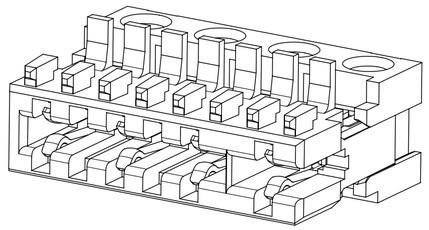

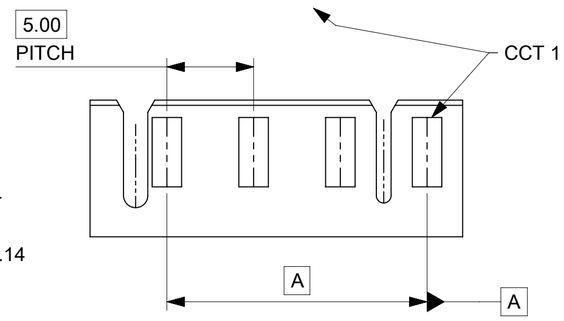

- PCB LAYOUT FOR 4CCT CONNECTOR
  (WITH OPTIONAL POSITIONAL RIB SLOT
  BETWEEN CCTS 1&2)
- RECOMMENDED PCB THICKNESS 1.5±0.14

NOTES:
1. ALL UNSPECIFIED DIMENSIONS SEE SHEET 1
2. PCB FEATURES WHEN USED ARE IDENTICAL IN SIZE AND POSITION ACROSS PCB OPTIONS
3. OPTIONS SHOWN ARE FOR REFERENCE ONLY, FOR PART CONFIGURATIONS SEE SHEETS 4-8
4. FOR PARTS NOT LISTED ON THIS DRAWING PLEASE CONTACT YOUR MOLEX SALES ENGINEER

THIS DRAWING CONTAINS INFORMATION THAT IS PROPRIETARY TO MOLEX ELECTRONIC TECHNOLOGIES, LLC AND SHOULD NOT BE USED WITHOUT WRITTEN PERMISSION

DIMENSION UNITS	SCALE
mm	1:1

GENERAL TOLERANCES (UNLESS SPECIFIED)

ANGULAR TOL	±	0.5 °
4 PLACES	±	
3 PLACES	±	0.05
2 PLACES	±	0.1
1 PLACE	±	0.2
0 PLACES	±	

DRAFT WHERE APPLICABLE MUST REMAIN WITHIN DIMENSIONS

CURRENT REV DESC:

EC NO: 761927
DRWN: RAHULH3 2023/09/14
CHK'D: RAHULH3 2023/09/18
APPR: MRAMAKRISHNA 2023/09/19

INITIAL REVISION:
DRWN: MBN02 2022/05/30
APPR: MRAMAKRISHNA 2023/02/08

THIRD ANGLE PROJECTION | DRAWING: A2-SIZE | SERIES: 220958

molex

R POWER 10 A, 0.75MM2 BLACK LATI
5MM TERMINAL PITCH (MATL: NYLON PA66)

PRODUCT CUSTOMER DRAWING

DOCUMENT NUMBER	DOC TYPE	DOC PART	REVISION
2209580001	PSD	000	A2

MATERIAL NUMBER	CUSTOMER	SHEET NUMBER
SEE TABLE	GENERAL MARKET	2 OF 9

DOCUMENT STATUS	P1	RELEASE DATE	2023/09/19 05:47:59

FORMAT: master-tb-prod-A2
REVISION: J1
DATE: 2021/05/01

1 ROW CODING KEYS OPTION D
END WALLS WITH POLARIZING RIBS

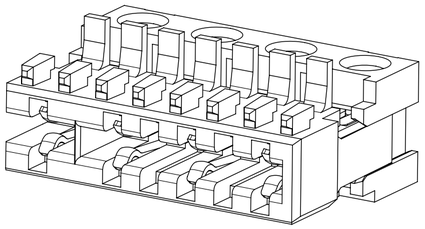

OPTION D END WALLS	
FIRST END WALL	LAST END WALL
CLOSED	OPEN

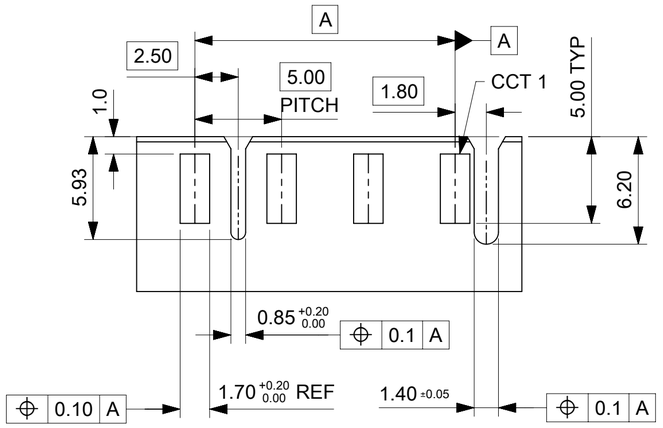

- PCB LAYOUT FOR 4CCT CONNECTOR
  (WITH OPTIONAL POSITIONAL RIB SLOT
  BETWEEN CCTS 3&4)
- RECOMMENDED PCB THICKNESS 1.5±0.14

1 ROW CODING KEYS
OPTION E END WALLS

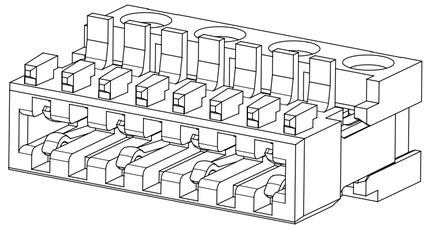

OPTION E END WALLS	
FIRST END WALL	LAST END WALL
CLOSED	CLOSED

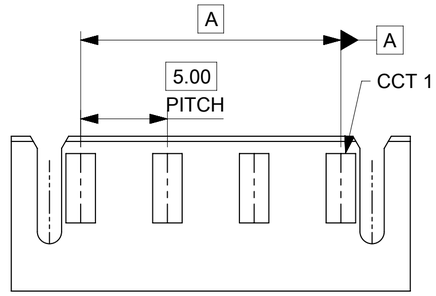

- PCB LAYOUT FOR 4CCT CONNECTOR
  (WITH NO OPTIONAL POSITIONAL RIB SLOTS)
- RECOMMENDED PCB THICKNESS 1.5±0.14

1 ROW CODING KEYS OPTION F
END WALLS WITH POLARIZING RIBS

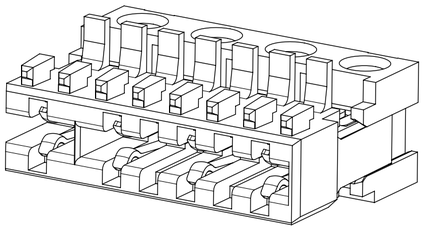

OPTION F END WALLS	
FIRST END WALL	LAST END WALL
NARROW FLUSH	OPEN

OPTION F: FIRST END NARROW FLUSH
LAST END WALL OPEN
SHOWN WITH SINGLE ROW CODING KEYS
RIB SHOWN BETWEEN CCTS 3&4

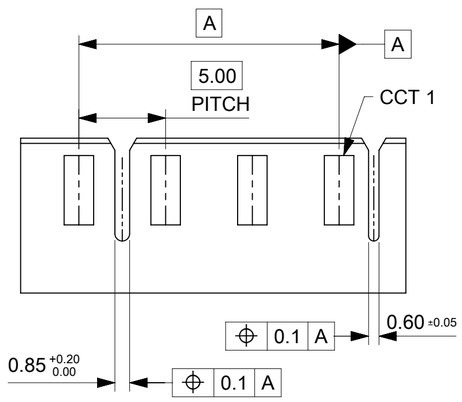

1 ROW CODING KEYS OPTION G
END WALLS WITH POLARIZING RIBS

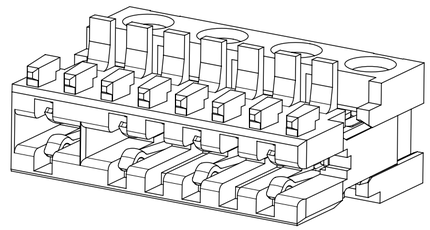

OPTION G END WALLS	
FIRST END WALL	LAST END WALL
OPEN	NARROW FLUSH

OPTION G: FIRST END OPEN
LAST END WALL NARROW FLUSH
SHOWN WITH SINGLE ROW CODING KEYS
RIB SHOWN BETWEEN CCTS 3&4

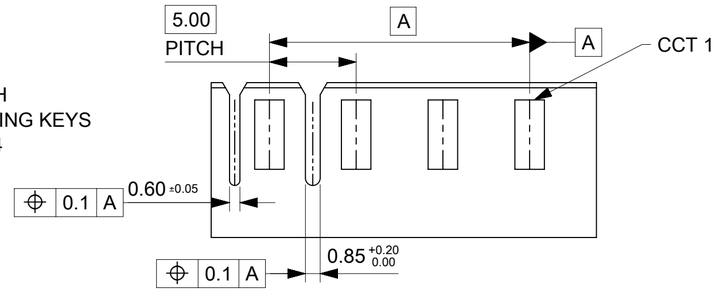

NOTES:
1. ALL UNSPECIFIED DIMENSIONS SEE SHEET 1
2. PCB FEATURES WHEN USED ARE IDENTICAL IN SIZE AND POSITION ACROSS PCB OPTIONS
3. OPTIONS SHOWN ARE FOR REFERENCE ONLY, FOR PART CONFIGURATIONS SEE SHEETS 4-8
4. FOR PARTS NOT LISTED ON THIS DRAWING PLEASE CONTACT YOUR MOLEX SALES ENGINEER

THIS DRAWING CONTAINS INFORMATION THAT IS PROPRIETARY TO MOLEX ELECTRONIC TECHNOLOGIES, LLC AND SHOULD NOT BE USED WITHOUT WRITTEN PERMISSION

DIMENSION UNITS	SCALE
mm	1:1

GENERAL TOLERANCES (UNLESS SPECIFIED)

ANGULAR TOL	±	0.5 °
4 PLACES	±	
3 PLACES	±	0.05
2 PLACES	±	0.1
1 PLACE	±	0.2
0 PLACES	±	

DRAFT WHERE APPLICABLE MUST REMAIN WITHIN DIMENSIONS

CURRENT REV DESC:

EC NO: 761927
DRWN: RAHULH3 2023/09/14
CHK'D: RAHULH3 2023/09/18
APPR: MRAMAKRISHNA 2023/09/19

INITIAL REVISION:
DRWN: MBN02 2022/05/30
APPR: MRAMAKRISHNA 2023/02/08

THIRD ANGLE PROJECTION | DRAWING: A2-SIZE | SERIES: 220958

molex

R POWER 10 A, 0.75MM2 BLACK LATI
5MM TERMINAL PITCH (MATL: NYLON PA66)

PRODUCT CUSTOMER DRAWING

DOCUMENT NUMBER	DOC TYPE	DOC PART	REVISION
2209580001	PSD	000	A2

MATERIAL NUMBER	CUSTOMER	SHEET NUMBER
SEE TABLE	GENERAL MARKET	3 OF 9

DOCUMENT STATUS	P1	RELEASE DATE	2023/09/19 05:47:59

FORMAT: master-tb-prod-A2
REVISION: J1
DATE: 2021/05/01

2 CIRCUIT

PART NUMBER	HOUSING USED	TERMINAL No.	TERMINAL VOID POSITION	REMOVED CODING KEYS	CONFIGURATION	LATCH BETWEEN	POLARIZING RIB BETWEEN	FIRST ENDWALL	LAST ENDWALL	COLOUR STRIPE
220958-0001	220850-0002	93268-0004	NONE	NONE	1 2	NONE	NONE	OPEN	OPEN	NONE
220958-0002	220851-2002	93268-0004	NONE	NONE	1 2	CCT 1 & 2	NONE	OPEN	OPEN	NONE
220958-0003	220852-7202	93268-0004	NONE	NONE	1 2	CCT 1 & 2	NONE	OPEN	OPEN	NONE

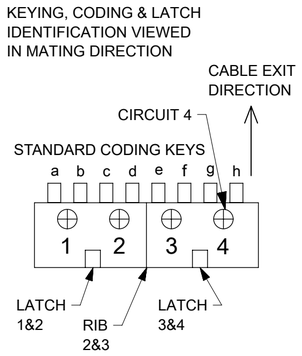

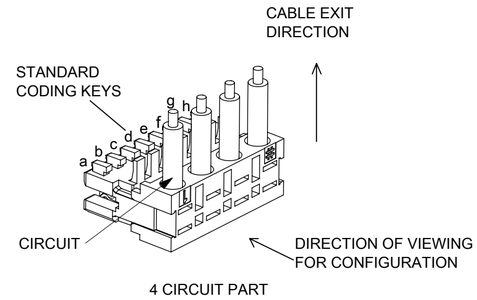

NOTES

1. + DENOTES TERMINAL VOIDED POSITION
   ⊕ DENOTES TERMINAL LOADED POSITION
   | DENOTES POLARIZING RIB POSITION
2. MOLEX HOUSING NO. FOR REFERENCE ONLY

THIS DRAWING CONTAINS INFORMATION THAT IS PROPRIETARY TO MOLEX ELECTRONIC TECHNOLOGIES, LLC AND SHOULD NOT BE USED WITHOUT WRITTEN PERMISSION

DIMENSION UNITS	SCALE
mm	1:1

GENERAL TOLERANCES (UNLESS SPECIFIED)		
ANGULAR TOL	±	0.5 °
4 PLACES	±	
3 PLACES	±	0.05
2 PLACES	±	0.1
1 PLACE	±	0.2
0 PLACES	±	

DRAFT WHERE APPLICABLE MUST REMAIN WITHIN DIMENSIONS

CURRENT REV DESC:

EC NO: 761927
DRWN: RAHULH3 2023/09/14
CHK'D: RAHULH3 2023/09/18
APPR: MRAMAKRISHNA 2023/09/19

INITIAL REVISION:
DRWN: MBN02 2022/05/30
APPR: MRAMAKRISHNA 2023/02/08

molex

R POWER 10 A, 0.75MM2 BLACK LATI
5MM TERMINAL PITCH (MATL: NYLON PA66)

PRODUCT CUSTOMER DRAWING

DOCUMENT NUMBER	DOC TYPE	DOC PART	REVISION
2209580001	PSD	000	A2

THIRD ANGLE PROJECTION	DRAWING	SERIES	MATERIAL NUMBER	CUSTOMER	SHEET NUMBER
	A2-SIZE	220958	SEE TABLE	GENERAL MARKET	4 OF 9

DOCUMENT STATUS	P1	RELEASE DATE	2023/09/19 05:47:59

FORMAT: master-tb-prod-A2
REVISION: J1
DATE: 2021/05/01

3 CIRCUIT

PART NUMBER	HOUSING USED	TERMINAL No.	TERMINAL VOID POSITION	REMOVED CODING KEYS	CONFIGURATION	LATCH BETWEEN	POLARIZING RIB BETWEEN	FIRST ENDWALL	LAST ENDWALL	COLOUR STRIPE
220958-1001	220850-0003	93268-0004	NONE	NONE	1 2 3	NONE	NONE	OPEN	OPEN	NONE

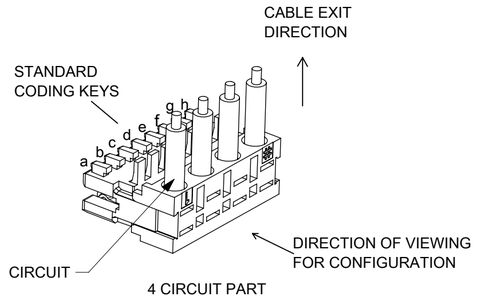

4 CIRCUIT PART

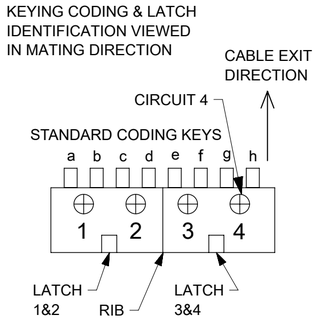

THIS DRAWING CONTAINS INFORMATION THAT IS PROPRIETARY TO MOLEX ELECTRONIC TECHNOLOGIES, LLC AND SHOULD NOT BE USED WITHOUT WRITTEN PERMISSION

DIMENSION UNITS	SCALE
mm	1:1

GENERAL TOLERANCES (UNLESS SPECIFIED)		
ANGULAR TOL	±	0.5 °
4 PLACES	±	
3 PLACES	±	0.05
2 PLACES	±	0.1
1 PLACE	±	0.2
0 PLACES	±	

DRAFT WHERE APPLICABLE MUST REMAIN WITHIN DIMENSIONS

CURRENT REV DESC:

EC NO: 761927
DRWN: RAHULH3 2023/09/14
CHK'D: RAHULH3 2023/09/18
APPR: MRAMAKRISHNA 2023/09/19

INITIAL REVISION:
DRWN: MBN02 2022/05/30
APPR: MRAMAKRISHNA 2023/02/08

THIRD ANGLE PROJECTION | DRAWING: A2-SIZE | SERIES: 220958

molex

R POWER 10 A, 0.75MM2 BLACK LATI
5MM TERMINAL PITCH (MATL: NYLON PA66)

PRODUCT CUSTOMER DRAWING

DOCUMENT NUMBER	DOC TYPE	DOC PART	REVISION
2209580001	PSD	000	A2

MATERIAL NUMBER	CUSTOMER	SHEET NUMBER
SEE TABLE	GENERAL MARKET	5 OF 9

DOCUMENT STATUS	P1	RELEASE DATE	2023/09/19 05:47:59

FORMAT: master-lb-prod-A2
REVISION: J1
DATE: 2021/05/01

4 CIRCUIT

PART NUMBER	HOUSING USED	TERMINAL No.	TERMINAL VOID POSITION	REMOVED CODING KEYS	CONFIGURATION	LATCH BETWEEN	POLARIZING RIB BETWEEN	FIRST ENDWALL	LAST ENDWALL	COLOUR STRIPE
220958-2001	220850-0004	93268-0004	NONE	NONE	1 2 3 4	NONE	NONE	OPEN	OPEN	NONE

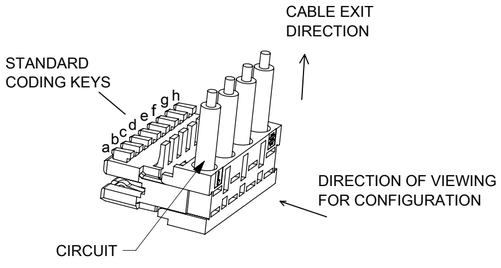

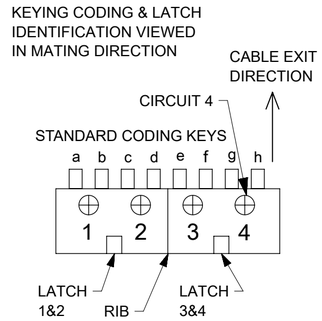

THIS DRAWING CONTAINS INFORMATION THAT IS PROPRIETARY TO MOLEX ELECTRONIC TECHNOLOGIES, LLC AND SHOULD NOT BE USED WITHOUT WRITTEN PERMISSION

DIMENSION UNITS	SCALE
mm	1:1

GENERAL TOLERANCES (UNLESS SPECIFIED)		
ANGULAR TOL	±	0.5 °
4 PLACES	±	
3 PLACES	±	0.05
2 PLACES	±	0.1
1 PLACE	±	0.2
0 PLACES	±	

DRAFT WHERE APPLICABLE MUST REMAIN WITHIN DIMENSIONS

CURRENT REV DESC:

EC NO: 761927
DRWN: RAHULH3 2023/09/14
CHK'D: RAHULH3 2023/09/18
APPR: MRAMAKRISHNA 2023/09/19

INITIAL REVISION:
DRWN: MBN02 2022/05/30
APPR: MRAMAKRISHNA 2023/02/08

molex

R POWER 10 A, 0.75MM2 BLACK LATI
5MM TERMINAL PITCH (MATL: NYLON PA66)

PRODUCT CUSTOMER DRAWING

DOCUMENT NUMBER	DOC TYPE	DOC PART	REVISION
2209580001	PSD	000	A2

THIRD ANGLE PROJECTION	DRAWING	SERIES	MATERIAL NUMBER	CUSTOMER	SHEET NUMBER
	A2-SIZE	220958	SEE TABLE	GENERAL MARKET	6 OF 9

DOCUMENT STATUS	P1	RELEASE DATE	2023/09/19 05:47:59

FORMAT: master-tb-prod-A2
REVISION: J1
DATE: 2021/05/01

5 CIRCUIT

PART NUMBER	HOUSING USED	TERMINAL No.	TERMINAL VOID POSITION	REMOVED CODING KEYS	CONFIGURATION	LATCH BETWEEN	POLARIZING RIB BETWEEN	FIRST ENDWALL	LAST ENDWALL	COLOUR STRIPE
220958-3001	220850-0005	93268-0004	NONE	NONE	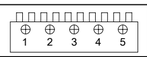	NONE	NONE	OPEN	OPEN	NONE

THIS DRAWING CONTAINS INFORMATION THAT IS PROPRIETARY TO MOLEX ELECTRONIC TECHNOLOGIES, LLC AND SHOULD NOT BE USED WITHOUT WRITTEN PERMISSION

DIMENSION UNITS	SCALE
mm	1:1

GENERAL TOLERANCES (UNLESS SPECIFIED)

ANGULAR TOL	±	0.5 °
4 PLACES	±	
3 PLACES	±	0.05
2 PLACES	±	0.1
1 PLACE	±	0.2
0 PLACES	±	

DRAFT WHERE APPLICABLE MUST REMAIN WITHIN DIMENSIONS

CURRENT REV DESC:

EC NO: 761927
DRWN: RAHULH3 2023/09/14
CHK'D: RAHULH3 2023/09/18
APPR: MRAMAKRISHNA 2023/09/19

INITIAL REVISION:
DRWN: MBN02 2022/05/30
APPR: MRAMAKRISHNA 2023/02/08

THIRD ANGLE PROJECTION | DRAWING: A2-SIZE | SERIES: 220958

molex

R POWER 10 A, 0.75MM2 BLACK LATI
5MM TERMINAL PITCH (MATL: NYLON PA66)

PRODUCT CUSTOMER DRAWING

DOCUMENT NUMBER	DOC TYPE	DOC PART	REVISION
2209580001	PSD	000	A2

MATERIAL NUMBER	CUSTOMER	SHEET NUMBER
SEE TABLE	GENERAL MARKET	7 OF 9

DOCUMENT STATUS	P1	RELEASE DATE	2023/09/19 05:47:59

FORMAT: master-tb-prod-A2
REVISION: J1
DATE: 2021/05/01

6 CIRCUIT

PART NUMBER	HOUSING USED	TERMINAL No.	TERMINAL VOID POSITION	REMOVED CODING KEYS	CONFIGURATION	LATCH BETWEEN	POLARIZING RIB BETWEEN	FIRST ENDWALL	LAST ENDWALL	COLOUR STRIPE
220958-4001	220850-0006	93268-0004	NONE	NONE	1 2 3 4 5 6	NONE	NONE	OPEN	OPEN	NONE

7 CIRCUIT

PART NUMBER	HOUSING USED	TERMINAL No.	TERMINAL VOID POSITION	REMOVED CODING KEYS	CONFIGURATION	LATCH BETWEEN	POLARIZING RIB BETWEEN	FIRST ENDWALL	LAST ENDWALL	COLOUR STRIPE
220958-5001	220850-0007	93268-0004	NONE	NONE	1 2 3 4 5 6 7	NONE	NONE	OPEN	OPEN	NONE

THIS DRAWING CONTAINS INFORMATION THAT IS PROPRIETARY TO MOLEX ELECTRONIC TECHNOLOGIES, LLC AND SHOULD NOT BE USED WITHOUT WRITTEN PERMISSION

DIMENSION UNITS	SCALE
mm	1:1

GENERAL TOLERANCES (UNLESS SPECIFIED)

ANGULAR TOL	±	0.5 °
4 PLACES	±	
3 PLACES	±	0.05
2 PLACES	±	0.1
1 PLACE	±	0.2
0 PLACES	±	

DRAFT WHERE APPLICABLE MUST REMAIN WITHIN DIMENSIONS

CURRENT REV DESC:

EC NO: 761927
DRWN: RAHULH3 2023/09/14
CHK'D: RAHULH3 2023/09/18
APPR: MRAMAKRISHNA 2023/09/19

INITIAL REVISION:
DRWN: MBN02 2022/05/30
APPR: MRAMAKRISHNA 2023/02/08

THIRD ANGLE PROJECTION | DRAWING: A2-SIZE | SERIES: 220958

molex

R POWER 10 A, 0.75MM2 BLACK LATI
5MM TERMINAL PITCH (MATL: NYLON PA66)

PRODUCT CUSTOMER DRAWING

DOCUMENT NUMBER	DOC TYPE	DOC PART	REVISION
2209580001	PSD	000	A2

MATERIAL NUMBER	CUSTOMER	SHEET NUMBER
SEE TABLE	GENERAL MARKET	8 OF 9

DOCUMENT STATUS	P1	RELEASE DATE	2023/09/19 05:47:59

FORMAT: master-tb-prod-A2
REVISION: J1
DATE: 2021/05/01

8 CIRCUIT

PART NUMBER	HOUSING USED	TERMINAL No.	TERMINAL VOID POSITION	REMOVED CODING KEYS	CONFIGURATION	LATCH BETWEEN	POLARIZING RIB BETWEEN	FIRST ENDWALL	LAST ENDWALL	COLOUR STRIPE
220958-6001	220850-0008	93268-0004	NONE	NONE	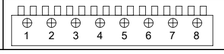	NONE	NONE	OPEN	OPEN	NONE

THIS DRAWING CONTAINS INFORMATION THAT IS PROPRIETARY TO MOLEX ELECTRONIC TECHNOLOGIES, LLC AND SHOULD NOT BE USED WITHOUT WRITTEN PERMISSION

DIMENSION UNITS	SCALE
mm	1:1

GENERAL TOLERANCES (UNLESS SPECIFIED)		
ANGULAR TOL	±	0.5 °
4 PLACES	±	
3 PLACES	±	0.05
2 PLACES	±	0.1
1 PLACE	±	0.2
0 PLACES	±	

DRAFT WHERE APPLICABLE MUST REMAIN WITHIN DIMENSIONS

CURRENT REV DESC:

EC NO: 761927
DRWN: RAHULH3 2023/09/14
CHK'D: RAHULH3 2023/09/18
APPR: MRAMAKRISHNA 2023/09/19

INITIAL REVISION:
DRWN: MBN02 2022/05/30
APPR: MRAMAKRISHNA 2023/02/08

molex

R POWER 10 A, 0.75MM2 BLACK LATI
5MM TERMINAL PITCH (MATL: NYLON PA66)

PRODUCT CUSTOMER DRAWING

DOCUMENT NUMBER	DOC TYPE	DOC PART	REVISION
2209580001	PSD	000	A2

THIRD ANGLE PROJECTION	DRAWING	SERIES	MATERIAL NUMBER	CUSTOMER	SHEET NUMBER
	A2-SIZE	220958	SEE TABLE	GENERAL MARKET	9 OF 9

DOCUMENT STATUS	P1	RELEASE DATE	2023/09/19 05:47:59

FORMAT: master-tb-prod-A2
REVISION: J1
DATE: 2021/05/01