Product data sheet

Specifications



Limit switch, XC Standard, XCKJ, thermoplastic plastic roller lever var. length, 1NC+1 NO, snap, Pg13

XCKJ10541

Main

Range of product	Telemecanique Limit switches XC Standard
Series name	Standard format
product or component type	Limit switch
Device short name	XCKJ
Sensor design	-
Body type	Fixed
Head type	Rotary head
Material	Metal
body material	Zamak
Head material	Zamak
Fixing mode	By the body
Movement of operating head	Rotary
Type of operator	Spring return roller lever thermoplastic variable length
Type of approach	Lateral approach, 1 or 2 programmable direction
Cable entry	1 entry tapped for Pg 13.5 cable gland, cable outer diameter: 9…12 mm
Number of poles	2
Contacts type and composition	1 NC + 1 NO
Contact operation	Snap action

Complementary

Switch actuation	By 30° cam
Electrical connection	Screw-clamp terminals, clamping capacity: 1 x 0.34...2 x 1.5 mm²
Contacts insulation form	Zb
Number of steps	1
Positive opening	Without
Minimum torque for tripping	0.25 N.m
Maximum actuation speed	1.5 m/s
[Ie] rated operational current	3 A at 240 V, AC-15, A300 conforming to IEC 60947-5-1 appendix A 0.27 A at 250 V, DC-13, Q300 conforming to IEC 60947-5-1 appendix A
[Ithe] conventional enclosed thermal current	10 A

Disclaimer: This documentation is not intended as a substitute for and is not to be used for determining suitability or reliability of these products for specific user applications

[Ui] rated insulation voltage	300 V conforming to UL 508 500 V (pollution degree 3) conforming to IEC 60947-1 300 V conforming to CSA C22.2 No 14
Maximum resistance across terminals	25 MOhm conforming to IEC 60255-7 category 3
[Uimp] rated impulse withstand voltage	6 kV conforming to IEC 60664 6 kV conforming to IEC 60947-1
Short-circuit protection	10 A cartridge fuse, type gG
Electrical durability	5000000 cycles, DC-13, inductive load type, 120 V, 4 W, operating rate <60 cyc/mn, load factor: 0.5 conforming to IEC 60947-5-1 appendix C 5000000 cycles, DC-13, inductive load type, 24 V, 10 W, operating rate <60 cyc/mn, load factor: 0.5 conforming to IEC 60947-5-1 appendix C 5000000 cycles, DC-13, inductive load type, 48 V, 7 W, operating rate <60 cyc/mn, load factor: 0.5 conforming to IEC 60947-5-1 appendix C
Mechanical durability	30000000 cycles
Width	40 mm
Height	77 mm
Depth	44 mm
net weight	0.485 kg
Terminals description ISO n°1	(21-22)NC (13-14)NO

Environment

Shock resistance	50 gn for 11 ms conforming to IEC 60068-2-27
Vibration resistance	25 gn (f= 10…500 Hz) conforming to IEC 60068-2-6
IP degree of protection	IP66 conforming to IEC 60529
IK degree of protection	IK07 conforming to IEC 62262
Overvoltage category	Class I conforming to IEC 61140 Class I conforming to NF C 20-030
Ambient air temperature for operation	-25…70 °C
Ambient air temperature for storage	-40…70 °C
protective treatment	TH
Product certifications	CCC UL CSA
Standards	CENELEC EN 50041 IEC 60204-1 CSA C22.2 No 14 IEC 60204-1 UL 508 IEC 60947-5-1 IEC 60947-5-1

Packing Units

Unit Type of Package 1	PCE
Number of Units in Package 1	1
Package 1 Height	4.3 cm
Package 1 Width	7.0 cm
Package 1 Length	12.8 cm
Package 1 Weight	496.0 g
Unit Type of Package 2	S02

Number of Units in Package 2	18
Package 2 Height	15 cm
Package 2 Width	30 cm
Package 2 Length	40 cm
Package 2 Weight	9.23 kg
Unit Type of Package 3	PAL
Number of Units in Package 3	288
Package 3 Height	77.0 cm
Package 3 Width	60.0 cm
Package 3 Length	80.0 cm
Package 3 Weight	153.732 kg

Contractual warranty

Warranty	18 months

Sustainability

Green Premium^{TM} label is Schneider Electric's commitment to delivering products with best-in-class environmental performance. Green Premium promises compliance with the latest regulations, transparency on environmental impacts, as well as circular and low-CO_2 products.

Guide to assessing product sustainability is a white paper that clarifies global eco-label standards and how to interpret environmental declarations.

Learn more about Green Premium >

Guide to assess a product's sustainability >



RoHS/REACh

Well-being performance

Mercury Free	
Rohs Exemption Information	Yes

Certifications & Standards

Reach Regulation	REACh Declaration
Eu Rohs Directive	Pro-active compliance (Product out of EU RoHS legal scope)
Circularity Profile	No need of specific recycling operations
California Proposition 65	WARNING: This product can expose you to chemicals including: Diisononyl phthalate (DINP), which is known to the State of California to cause cancer, and Di-isodecyl phthalate (DIDP), which is known to the State of California to cause birth defects or other reproductive harm. For more information go to www.P65Warnings.ca.gov

Dimensions Drawings

Dimensions

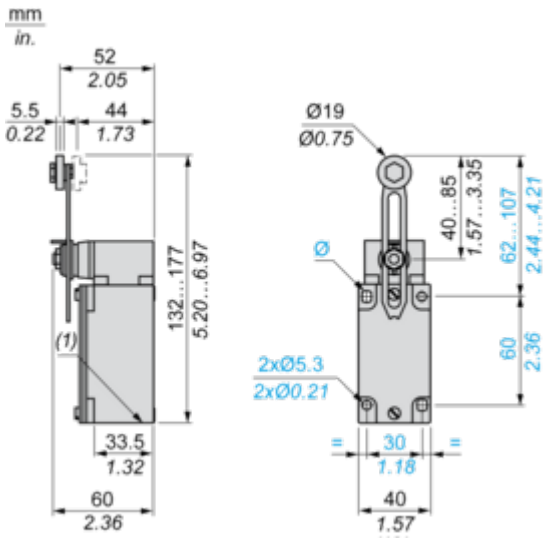

(1) 1 tapped entry Pg 13.5

Mounting and Clearance

Mounting with Cable Entry

Position of Cable Gland

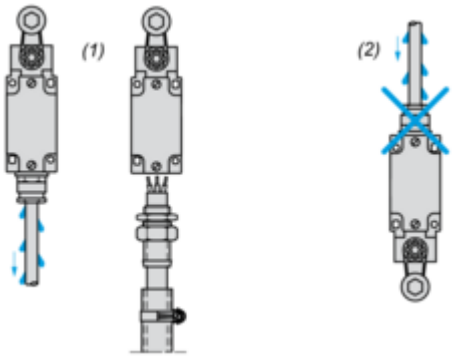

(1) Recommended
(2) To be avoided

Mounting with Rotary Heads and Levers

Type of Cam

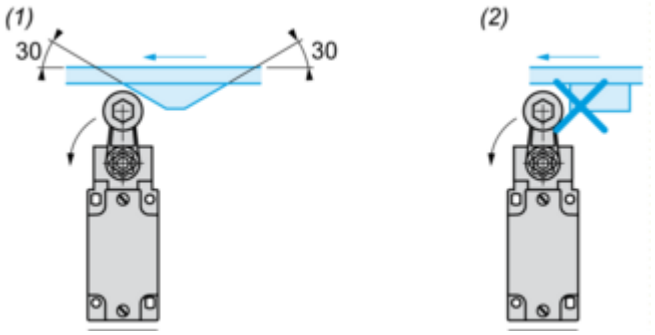

(1) Recommended
(2) To be avoided

Setting-up with Lever Head

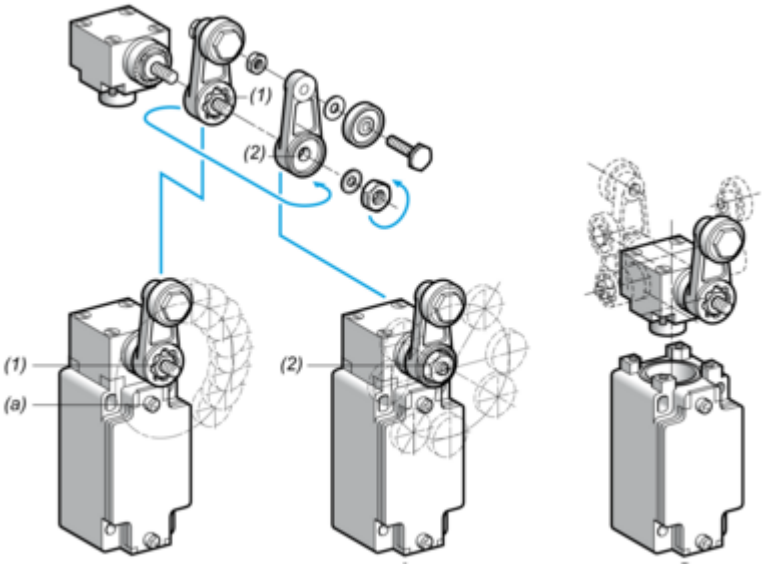

(1) 5° steps throughout 360° / Tightening torque (Min : 1) (Max : 1.5)
(2) 45° steps throughout 360° / Tightening torque (Min : 1) (Max : 1.5)
(a) Tightening torque (Min : 1) (Max : 1.5)

Setting-up with Head ZCKE05

Direction of Actuation Programming

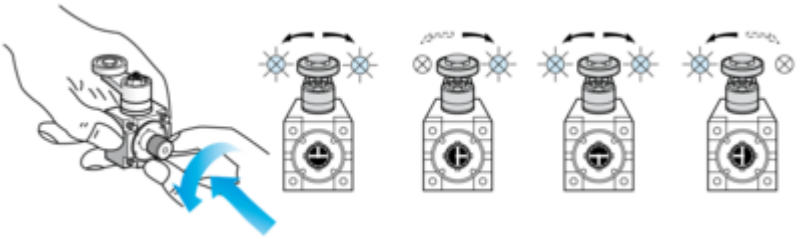

Connections and Schema

Wiring Diagram

2-pole NC + NO Snap Action

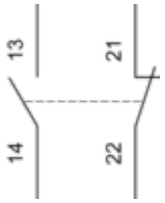

Technical Description

Characteristics of Actuation

Switch Actuation by 30° Cam

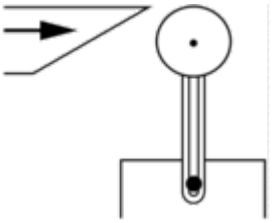

Functionnal Diagram

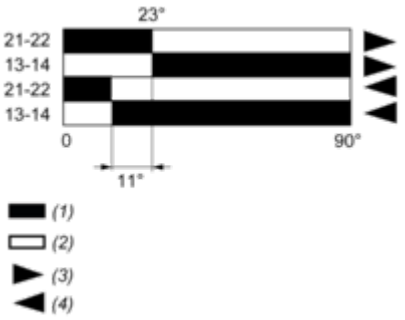

(1) Closed
(2) Open
(3) Tripping
(4) Resetting