HC-B-SG-PL-BK - Strain relief

1424343

https://www.phoenixcontact.com/us/products/1424343

Please be informed that the data shown in this PDF document is generated from our online catalog. Please find the complete data in the user documentation. Our general terms of use for downloads are valid.



Strain relief, design: B6 - B24

Commercial data

Item number	1424343
Packing unit	1 pc
Minimum order quantity	1 pc
Sales key	BF60
Product key	BF7AHZ
Catalog page	Page 684 (C-2-2019)
GTIN	4055626370804
Weight per piece (including packing)	22.9 g
Weight per piece (excluding packing)	22.9 g
Customs tariff number	85389099
Country of origin	CN

Technical data

Product properties

Product type	Strain relief

Material specifications

Material	PA

Drawings

Dimensional drawing

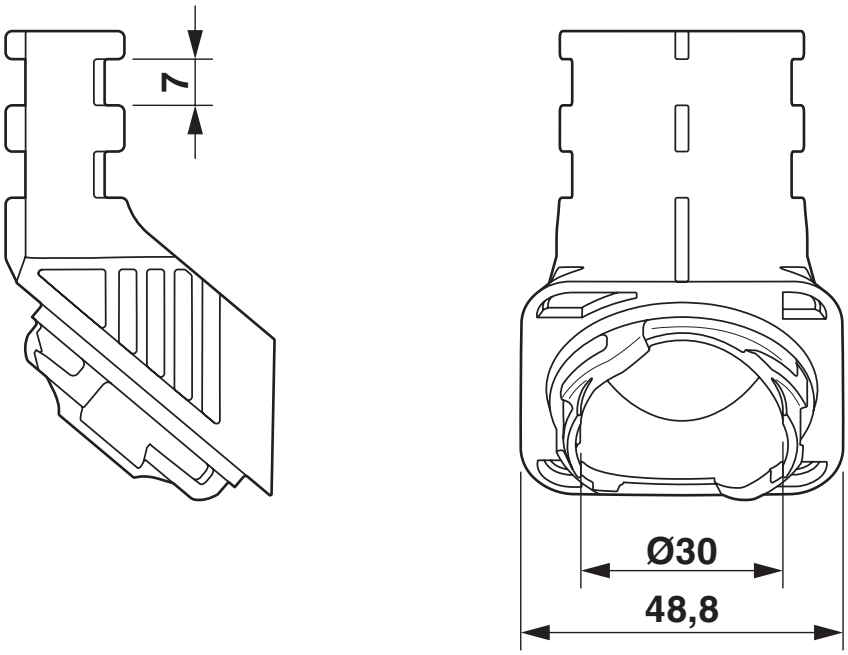

Dimensional drawing

Classifications

ECLASS

ECLASS-11.0	27440192
ECLASS-12.0	27440192
ECLASS-13.0	27440192

ETIM

ETIM 9.0	EC002943

UNSPSC

UNSPSC 21.0	39121400

Environmental product compliance

EU RoHS

Fulfills EU RoHS substance requirements	Yes, No exemptions

China RoHS

Environment friendly use period (EFUP)	EFUP-E
	No hazardous substances above the limits

EU REACH SVHC

REACH candidate substance (CAS No.)	No substance above 0.1 wt%

Accessories

HC-CIF-B06-24-AEWL-PL-BK - Connection element

1424342

https://www.phoenixcontact.com/us/products/1424342



Connection element, design: B6 - B24

Phoenix Contact 2024 © - all rights reserved
https://www.phoenixcontact.com

Phoenix Contact USA
586 Fulling Mill Road
Middletown, PA 17057, United States
(+717) 944-1300
info@phoenixcon.com