Data sheet



AFM60A-S4IB018x12

AFS/AFM60 Ethernet

ABSOLUTE ENCODERS

SICK
Sensor Intelligence.

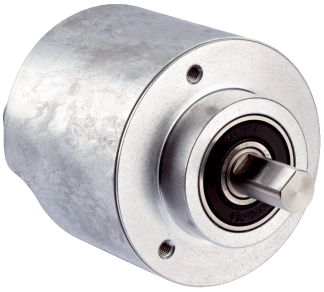

Illustration may differ

Ordering information

Type	part no.
AFM60A-S4IB018x12	1055334

Other models and accessories ➜ www.sick.com/AFS_AFM60_Ethernet

Detailed technical data

Safety-related parameters

$MTTF_D$ (mean time to dangerous failure)	80 years (EN ISO 13849-1) [1]

[1] This product is a standard product and does not constitute a safety component as defined in the Machinery Directive. Calculation based on nominal load of components, average ambient temperature 40 °C, frequency of use 8760 h/a. All electronic failures are considered hazardous. For more information, see document no. 8015532.

Performance

Number of steps per revolution (max. resolution)	262,144 (18 bit)
Number of revolutions	4,096 (12 bit)
Max. resolution (number of steps per revolution x number of revolutions)	18 bit x 12 bit (262,144 x 4,096)
Error limits G	0.03° [1]
Repeatability standard deviation σ_r	0.002° [2]

[1] In accordance with DIN ISO 1319-1, position of the upper and lower error limit depends on the installation situation, specified value refers to a symmetrical position, i.e. deviation in upper and lower direction is the same.

[2] In accordance with DIN ISO 55350-13; 68.3% of the measured values are inside the specified area.

Interfaces

Communication interface	EtherNet/IP™
Encoder profile	V4.1 class3
Data transmission rate (baud rate)	10 Mbit/s, 100 Mbit/s
Transmission medium	CAT-5e cable
Initialization time	Approx. 10 s
RPI (requested packet interval)	5 ms ... 750 ms
Parameterising data	Number of steps per revolution Number of revolutions PRESET Counting direction Sampling rate for speed calculation Unit for output of speed, acceleration and temperature value

	Output of scalable limit values such as: position ranges, speed, acceleration, start-up of the CW/CCW directions of rotation, change of direction of rotation, operating hours and hours of shaft movement (motion) Round axis functionality Heartbeat
Available diagnostics data	Minimum and maximum temperature Maximumspeed Power-on counter Operatinghours counter power-on/motion Counter of direction changes/number of movements cw/number of movements ccw Number of changes of direction Minimum andmaximum operating voltage Signal monitoring for singleturn and multiturn
DLR (Device Level Ring)	✓

Electronics

Connection type	Male connector, 1x, M12, 4-pin, axial [1] Female connector, 2x, M12, 4-pin, axial [2]
Supply voltage	10 ... 30 V
Power consumption	≤ 3 W (without load)
Reverse polarity protection	✓

[1] A-coded.
[2] D-coded.

Mechanics

Mechanical design	Solid shaft, face mount flange
Shaft diameter	10 mm
Shaft length	19 mm
Characteristics of the shaft	With flat
Weight	0.2 kg
Shaft material	Stainless steel
Flange material	Aluminum
Housing material	Aluminum
Start up torque	0.5 Ncm (+20 °C)
Operating torque	0.3 Ncm (+20 °C)
Permissible shaft loading	80 N (radial) 40 N (axial)
Operating speed	≤ 9,000 min^{-1} [1]
Moment of inertia of the rotor	6.2 gcm^2
Bearing lifetime	3 x 10^9 revolutions
Angular acceleration	≤ 500,000 rad/s^2

[1] Allow for self-heating of 3.3 K per 1,000 rpm when designing the operating temperature range.

Ambient data

EMC	According to EN 61000-6-2 and EN 61000-6-3
Enclosure rating	IP65, shaft side (IEC 60529) IP67, housing side (IEC 60529) [1]

[1] With mating connector fitted.

Permissible relative humidity	90 % (Condensation not permitted)
Operating temperature range	–40 °C ... +85 °C
Storage temperature range	–40 °C ... +100 °C, without package
Resistance to shocks	100 g, 6 ms (EN 60068-2-27)
Resistance to vibration	30 g, 10 Hz ... 2,000 Hz (EN 60068-2-6)

[1] With mating connector fitted.

Classifications

ECLASS 5.0	27270502
ECLASS 5.1.4	27270502
ECLASS 6.0	27270590
ECLASS 6.2	27270590
ECLASS 7.0	27270502
ECLASS 8.0	27270502
ECLASS 8.1	27270502
ECLASS 9.0	27270502
ECLASS 10.0	27270502
ECLASS 11.0	27270502
ECLASS 12.0	27270502
ETIM 5.0	EC001486
ETIM 6.0	EC001486
ETIM 7.0	EC001486
ETIM 8.0	EC001486
UNSPSC 16.0901	41112113

Certificates

EU declaration of conformity	✓
UK declaration of conformity	✓
ACMA declaration of conformity	✓
Moroccan declaration of conformity	✓
China-RoHS	✓
cTUVus certificate	✓
Ethernet/IP certificate	✓
Information according to Art. 3 of Data Act (Regulation EU 2023/2854)	✓

Dimensional drawing Solid shaft, face mount flange

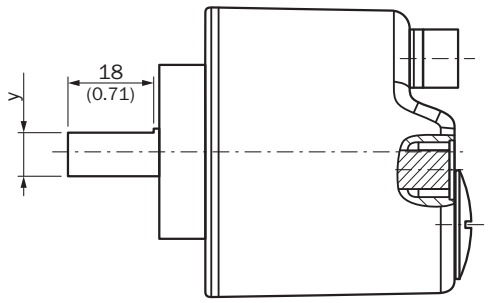

Dimensions in mm (inch)
diameter x f7 corresponds to the shaft diameter

Dimensional drawing Solid shaft, face mount flange, round

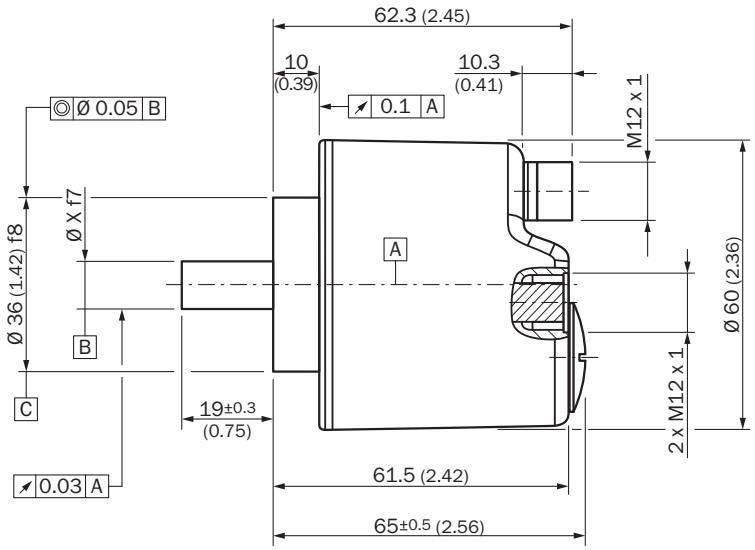

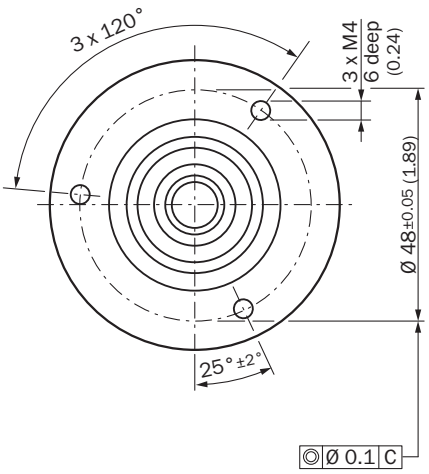

All dimensions in mm (inch)

Dimensions in mm (inch)
diameter x f7 corresponds to the shaft diameter

PIN assignment Female connector

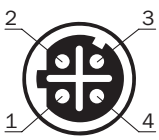

Port 1, Port 2

PIN	Signal
1	T x D+
2	R x D+
3	T x D-

PIN	Signal
4	R x D-

PIN assignment Male connector

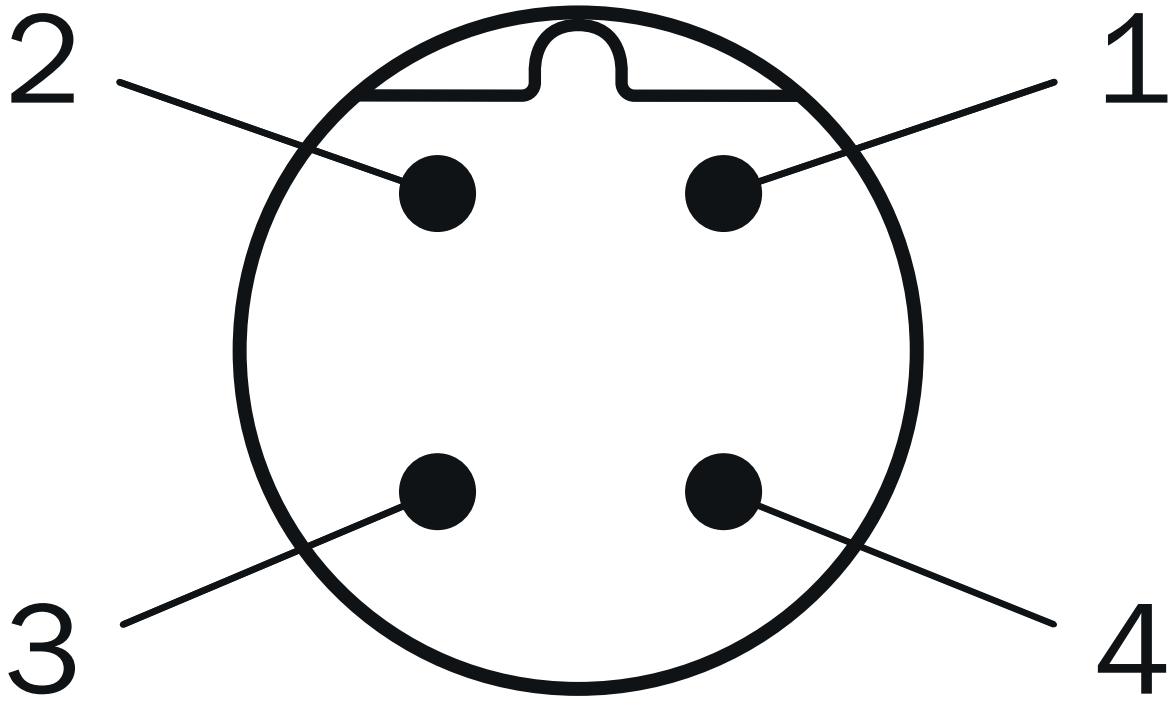

Supply voltage

PIN	Signal
1	10 V ... 30 V
2	Not assigned
3	GND
4	Not assigned

Connection diagram

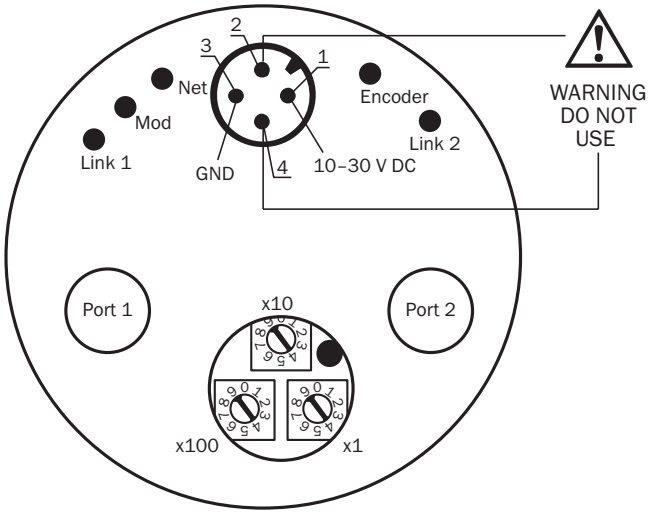

Recommended accessories

Other models and accessories ➜ www.sick.com/AFS_AFM60_Ethernet

	Brief description	Type	part no.
connectors and cables			
	• **Connection type head A:** Female connector, M12, 4-pin, angled, A-coded • **Description:** Unshielded • **Connection systems:** Screw-type terminals • **Permitted cross-section:** ≤ 0.75 mm²	DOS-1204-W	6007303
	• **Connection type head A:** Male connector, M12, 4-pin, straight, D-coded • **Connection type head B:** Male connector, M12, 4-pin, straight, D-coded • **Signal type:** Ethernet • **Cable:** 5 m, 4-wire, CAT5, CAT5e, PUR, halogen-free • **Description:** Ethernet, shielded	SSL-1204-G05ME90	6045277
	• **Connection type head A:** Male connector, M12, 4-pin, straight, D-coded • **Connection type head B:** Male connector, M12, 4-pin, straight, D-coded • **Signal type:** Ethernet • **Cable:** 10 m, 4-wire, CAT5, CAT5e, PUR, halogen-free • **Description:** Ethernet, shielded	SSL-1204-G10ME90	6045279
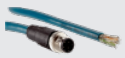	• **Connection type head A:** Male connector, M12, 4-pin, straight, D-coded • **Connection type head B:** Flying leads • **Signal type:** Ethernet • **Cable:** 2 m, 4-wire, CAT5, CAT5e, PUR, halogen-free • **Description:** Ethernet, shielded	STL-1204-G02ME90	6045284
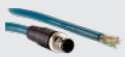	• **Connection type head A:** Male connector, M12, 4-pin, straight, D-coded • **Connection type head B:** Flying leads • **Signal type:** Ethernet • **Cable:** 5 m, 4-wire, CAT5, CAT5e, PUR, halogen-free • **Description:** Ethernet, shielded	STL-1204-G05ME90	6045285
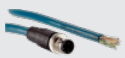	• **Connection type head A:** Male connector, M12, 4-pin, straight, D-coded • **Connection type head B:** Flying leads • **Signal type:** Ethernet • **Cable:** 10 m, 4-wire, CAT5, CAT5e, PUR, halogen-free • **Description:** Ethernet, shielded	STL-1204-G10ME90	6045286
	• **Connection type head A:** Female connector, M12, 4-pin, straight, D-coded • **Signal type:** Ethernet • **Cable:** CAT5, CAT5e • **Description:** Ethernet, shielded • **Connection systems:** IDC quick connection • **Permitted cross-section:** 0.14 mm² ... 0.34 mm²	DOS-1204-GE	6048153
	• **Connection type head A:** Female connector, M12, 4-pin, angled, D-coded • **Signal type:** Ethernet • **Cable:** CAT5, CAT5e • **Description:** Ethernet, shielded • **Connection systems:** IDC quick connection • **Permitted cross-section:** 0.14 mm² ... 0.34 mm²	DOS-1204-WE	6048154
	• **Connection type head A:** Male connector, M12, 4-pin, straight, D-coded • **Signal type:** Ethernet • **Cable:** CAT5, CAT5e • **Description:** Ethernet, shielded • **Connection systems:** IDC quick connection • **Permitted cross-section:** 0.14 mm² ... 0.34 mm²	STE-1204-GE01	6048151
	• **Connection type head A:** Male connector, M12, 4-pin, angled, D-coded • **Signal type:** Ethernet • **Cable:** CAT5, CAT5e • **Description:** Ethernet, shielded • **Connection systems:** IDC quick connection • **Permitted cross-section:** 0.14 mm² ... 0.34 mm²	STE-1204-WE	6048152
	• **Connection type head A:** Male connector, RJ45, 8-pin, straight • **Signal type:** Gigabit Ethernet • **Cable:** CAT6A • **Description:** Gigabit Ethernet, shielded • **Connection systems:** IDC quick connection • **Permitted cross-section:** 4.5 mm² ... 8 mm²	STE-0J08-GE	6048150
	• **Connection type head A:** Female connector, M12, 4-pin, D-coded • **Connection type head B:** Female connector, RJ45, 8-pin • **Signal type:** Ethernet • **Cable:** CAT5, CAT5e • **Description:** Ethernet, shielded	Feedthrough female connector Ethernet RJ45	6048180

	Brief description	Type	part no.
	• **Note:** Cabinet through		
	• **Connection type head A:** Female connector, M12, 4-pin, straight, A-coded • **Connection type head B:** Flying leads • **Signal type:** Sensor/actuator cable • **Cable:** 2 m, 4-wire, PUR, halogen-free • **Description:** Sensor/actuator cable, unshielded • **Application:** Uncontaminated zones, Zones with oils and lubricants, Robot, Drag chain operation	YF2A14-020UB3XLEAX	2095607
	• **Connection type head A:** Female connector, M12, 4-pin, straight, A-coded • **Connection type head B:** Flying leads • **Signal type:** Sensor/actuator cable • **Cable:** 5 m, 4-wire, PUR, halogen-free • **Description:** Sensor/actuator cable, unshielded • **Application:** Uncontaminated zones, Zones with oils and lubricants, Robot, Drag chain operation	YF2A14-050UB3XLEAX	2095608
	• **Connection type head A:** Female connector, M12, 4-pin, straight, A-coded • **Connection type head B:** Flying leads • **Signal type:** Sensor/actuator cable • **Cable:** 10 m, 4-wire, PUR, halogen-free • **Description:** Sensor/actuator cable, unshielded • **Application:** Uncontaminated zones, Zones with oils and lubricants, Robot, Drag chain operation	YF2A14-100UB3XLEAX	2095609
	• **Connection type head A:** Female connector, M12, 4-pin, straight, A-coded • **Connection type head B:** Flying leads • **Signal type:** Sensor/actuator cable • **Cable:** 25 m, 4-wire, PUR, halogen-free • **Description:** Sensor/actuator cable, unshielded • **Application:** Uncontaminated zones, Zones with oils and lubricants, Robot, Drag chain operation	YF2A14-250UB3XLEAX	2095615
	• **Connection type head A:** Female connector, M12, 4-pin, angled, A-coded • **Connection type head B:** Flying leads • **Signal type:** Sensor/actuator cable • **Cable:** 2 m, 4-wire, PUR, halogen-free • **Description:** Sensor/actuator cable, unshielded • **Application:** Uncontaminated zones, Zones with oils and lubricants, Robot, Drag chain operation	YG2A14-020UB3XLEAX	2095766
	• **Connection type head A:** Female connector, M12, 4-pin, angled, A-coded • **Connection type head B:** Flying leads • **Signal type:** Sensor/actuator cable • **Cable:** 5 m, 4-wire, PUR, halogen-free • **Description:** Sensor/actuator cable, unshielded • **Application:** Uncontaminated zones, Zones with oils and lubricants, Robot, Drag chain operation	YG2A14-050UB3XLEAX	2095767
	• **Connection type head A:** Female connector, M12, 4-pin, angled, A-coded • **Connection type head B:** Flying leads • **Signal type:** Sensor/actuator cable • **Cable:** 10 m, 4-wire, PUR, halogen-free • **Description:** Sensor/actuator cable, unshielded • **Application:** Uncontaminated zones, Zones with oils and lubricants, Robot, Drag chain operation	YG2A14-100UB3XLEAX	2095768
	• **Connection type head A:** Female connector, M12, 4-pin, angled, A-coded • **Connection type head B:** Flying leads • **Signal type:** Sensor/actuator cable • **Cable:** 25 m, 4-wire, PUR, halogen-free • **Description:** Sensor/actuator cable, unshielded • **Application:** Uncontaminated zones, Zones with oils and lubricants, Robot, Drag chain operation	YG2A14-250UB3XLEAX	2095771
	• **Connection type head A:** Male connector, M12, 4-pin, angled, D-coded • **Connection type head B:** Male connector, M12, 4-pin, angled, D-coded • **Signal type:** Ethernet, PROFINET • **Cable:** 2 m, 4-wire, PUR, halogen-free • **Description:** Ethernet, shieldedPROFINET • **Application:** Drag chain operation, Zones with oils and lubricants	YN2D24-020P-N1N2D24	2106168
	• **Connection type head A:** Male connector, M12, 4-pin, straight, D-coded • **Connection type head B:** Male connector, M12, 4-pin, angled, D-coded • **Signal type:** Ethernet, PROFINET • **Cable:** 2 m, 4-wire, PUR, halogen-free • **Description:** Ethernet, shieldedPROFINET • **Application:** Drag chain operation, Zones with oils and lubricants	YM2D24-020P-N1N2D24	2106165
	• **Connection type head A:** Male connector, M12, 4-pin, straight, D-coded • **Connection type head B:** Male connector, M12, 4-pin, angled, D-coded • **Signal type:** Ethernet, PROFINET • **Cable:** 5 m, 4-wire, PUR, halogen-free • **Description:** Ethernet, shieldedPROFINET	YM2D24-050P-N1N2D24	2106166

	Brief description	Type	part no.
	• **Application:** Drag chain operation, Zones with oils and lubricants		
	• **Connection type head A:** Male connector, M12, 4-pin, straight, D-coded • **Connection type head B:** Male connector, M12, 4-pin, angled, D-coded • **Signal type:** Ethernet, PROFINET • **Cable:** 10 m, 4-wire, PUR, halogen-free • **Description:** Ethernet, shieldedPROFINET • **Application:** Drag chain operation, Zones with oils and lubricants	YM2D24-100P-N1N2D24	2106167
	• **Connection type head A:** Male connector, M12, 4-pin, straight, D-coded • **Connection type head B:** Male connector, M12, 4-pin, straight, D-coded • **Signal type:** Ethernet, PROFINET • **Cable:** 2 m, 4-wire, PUR, halogen-free • **Description:** Ethernet, shieldedPROFINET • **Application:** Drag chain operation, Zones with oils and lubricants	YM2D24-020P-N1M2D24	2106159
	• **Connection type head A:** Male connector, M12, 4-pin, angled, D-coded • **Connection type head B:** Male connector, RJ45, 4-pin, straight • **Signal type:** Ethernet, PROFINET • **Cable:** 2 m, 4-wire, PUR, halogen-free • **Description:** Ethernet, shieldedPROFINET • **Application:** Drag chain operation, Zones with oils and lubricants	YN2D24-020P-N1MRJA4	2106162
	• **Connection type head A:** Male connector, M12, 4-pin, straight, D-coded • **Connection type head B:** Male connector, RJ45, 4-pin, straight • **Signal type:** Ethernet, PROFINET • **Cable:** 10 m, 4-wire, PUR, halogen-free • **Description:** Ethernet, shieldedPROFINET • **Application:** Drag chain operation, Zones with oils and lubricants	YM2D24-100P-N1MRJA4	2106185
	• **Connection type head A:** Male connector, M12, 4-pin, straight, D-coded • **Connection type head B:** Male connector, RJ45, 4-pin, straight • **Signal type:** Ethernet, PROFINET • **Cable:** 5 m, 4-wire, PUR, halogen-free • **Description:** Ethernet, shieldedPROFINET • **Application:** Drag chain operation, Zones with oils and lubricants	YM2D24-050P-N1MRJA4	2106184
	• **Connection type head A:** Male connector, M12, 4-pin, straight, D-coded • **Connection type head B:** Male connector, RJ45, 8-pin, straight • **Signal type:** Ethernet • **Cable:** 5 m, 4-wire, AWG26, PUR, halogen-free • **Description:** Ethernet, twisted pair, shielded	YM2D24-050EA1M-RJA4	6034415
	• **Connection type head A:** Male connector, M12, 4-pin, straight, D-coded • **Connection type head B:** Male connector, RJ45, 4-pin, straight • **Signal type:** Ethernet, PROFINET • **Cable:** 2 m, 4-wire, PUR, halogen-free • **Description:** Ethernet, shieldedPROFINET • **Application:** Drag chain operation, Zones with oils and lubricants	YM2D24-020P-N1MRJA4	2106182
	• **Connection type head A:** Male connector, M12, 4-pin, angled, D-coded • **Connection type head B:** Male connector, RJ45, 4-pin, straight • **Signal type:** Ethernet, PROFINET • **Cable:** 10 m, 4-wire, PUR, halogen-free • **Description:** Ethernet, shieldedPROFINET • **Application:** Drag chain operation, Zones with oils and lubricants	YN2D24-100P-N1MRJA4	2106164
	• **Connection type head A:** Male connector, M12, 4-pin, angled, D-coded • **Connection type head B:** Male connector, RJ45, 4-pin, straight • **Signal type:** Ethernet, PROFINET • **Cable:** 5 m, 4-wire, PUR, halogen-free • **Description:** Ethernet, shieldedPROFINET • **Application:** Drag chain operation, Zones with oils and lubricants	YN2D24-050P-N1MRJA4	2106163
	• **Connection type head A:** Male connector, M12, 4-pin, angled, D-coded • **Connection type head B:** Flying leads • **Signal type:** Ethernet, PROFINET • **Cable:** 5 m, 4-wire, PUR, halogen-free • **Description:** Ethernet, shieldedPROFINET • **Application:** Drag chain operation, Zones with oils and lubricants	YN2D24-050P-N1XLEAX	2106175
	• **Connection type head A:** Male connector, M12, 4-pin, angled, D-coded • **Connection type head B:** Male connector, RJ45, 4-pin, straight • **Signal type:** Ethernet, PROFINET • **Cable:** 3 m, 4-wire, PUR, halogen-free • **Description:** Ethernet, shieldedPROFINET	YN2D24-030P-N1MRJA4	2144265

	Brief description	Type	part no.
	• **Application:** Drag chain operation, Zones with oils and lubricants		
	• **Connection type head A:** Female connector, M12, 4-pin, straight, A-coded • **Connection type head B:** Flying leads • **Signal type:** Sensor/actuator cable • **Cable:** 0.6 m, 4-wire, PUR, halogen-free • **Description:** Sensor/actuator cable, unshielded • **Application:** Uncontaminated zones, Zones with oils and lubricants, Robot, Drag chain operation	YF2A14-C60UB3XLEAX	2145654
	• **Connection type head A:** Female connector, M12, 4-pin, straight, A-coded • **Connection type head B:** Flying leads • **Signal type:** Sensor/actuator cable • **Cable:** 1 m, 4-wire, PUR, halogen-free • **Description:** Sensor/actuator cable, unshielded • **Application:** Uncontaminated zones, Zones with oils and lubricants, Robot, Drag chain operation	YF2A14-010UB3XLEAX	2145655
	• **Connection type head A:** Female connector, M12, 4-pin, straight, A-coded • **Connection type head B:** Flying leads • **Signal type:** Sensor/actuator cable • **Cable:** 3 m, 4-wire, PUR, halogen-free • **Description:** Sensor/actuator cable, unshielded • **Application:** Uncontaminated zones, Zones with oils and lubricants, Robot, Drag chain operation	YF2A14-030UB3XLEAX	2145656
	• **Connection type head A:** Female connector, M12, 4-pin, angled, A-coded • **Connection type head B:** Flying leads • **Signal type:** Sensor/actuator cable • **Cable:** 0.6 m, 4-wire, PUR, halogen-free • **Description:** Sensor/actuator cable, unshielded • **Application:** Uncontaminated zones, Zones with oils and lubricants, Robot, Drag chain operation	YG2A14-C60UB3XLEAX	2145657
	• **Connection type head A:** Female connector, M12, 4-pin, angled, A-coded • **Connection type head B:** Flying leads • **Signal type:** Sensor/actuator cable • **Cable:** 1 m, 4-wire, PUR, halogen-free • **Description:** Sensor/actuator cable, unshielded • **Application:** Uncontaminated zones, Zones with oils and lubricants, Robot, Drag chain operation	YG2A14-010UB3XLEAX	2145658
	• **Connection type head A:** Male connector, M12, 4-pin, angled, D-coded • **Connection type head B:** Flying leads • **Signal type:** Ethernet, PROFINET • **Cable:** 20 m, 4-wire, PUR, halogen-free • **Description:** Ethernet, shieldedPROFINET • **Application:** Drag chain operation, Zones with oils and lubricants	YN2D24-200P-N1XLEAX	2122743
	• **Connection type head A:** Female connector, M12, 4-pin, angled, A-coded • **Connection type head B:** Flying leads • **Signal type:** Sensor/actuator cable • **Cable:** 20 m, 4-wire, PUR, halogen-free • **Description:** Sensor/actuator cable, unshielded • **Application:** Uncontaminated zones, Zones with oils and lubricants, Robot, Drag chain operation	YG2A14-200UB3XLEAX	2095770
	• **Connection type head A:** Female connector, M12, 4-pin, straight, A-coded • **Connection type head B:** Flying leads • **Signal type:** Sensor/actuator cable • **Cable:** 20 m, 4-wire, PUR, halogen-free • **Description:** Sensor/actuator cable, unshielded • **Application:** Uncontaminated zones, Zones with oils and lubricants, Robot, Drag chain operation	YF2A14-200UB3XLEAX	2095611
	• **Connection type head A:** Male connector, M12, 4-pin, angled, D-coded • **Connection type head B:** Flying leads • **Signal type:** Ethernet, PROFINET • **Cable:** 10 m, 4-wire, PUR, halogen-free • **Description:** Ethernet, shieldedPROFINET • **Application:** Drag chain operation, Zones with oils and lubricants	YN2D24-100P-N1XLEAX	2106176

	Brief description	Type	part no.
Mounting systems			
	• **Description:** Flange adapter, adaptation of face mount flange with 36 mm centering hub to 50 mm servo flange, aluminum, including 3 flat head screws M4 x 10 • **Material:** Aluminum • **Details:** Aluminum • **Items supplied:** Including 3 countersunk screws M3 x 10	BEF-FA-036-050	2029160
	• **Description:** Flange adapter, adaptation of face mount flange with 36 mm centering hub to 60 mm square mounting plate, aluminum, including 3 flat head screws M4 x 8 • **Material:** Aluminum • **Details:** Aluminum • **Items supplied:** Including 3 countersunk screws M4 x 8	BEF-FA-036-060REC	2029162
	• **Description:** Flange adapter, adaptation of face mount flange with 36 mm centering hub to 58 mm square mounting plate with shock absorbers, aluminum • **Material:** Aluminum • **Details:** Aluminum	BEF-FA-036-060RSA	2029163
	• **Description:** Flange adapter, adaptation of face mount flange with 36 mm centering hub to 63 mm square mounting plate, aluminum, including 3 flat head screws M4 x 10 • **Material:** Aluminum • **Details:** Aluminum • **Items supplied:** Including 3 countersunk screws M3 x 10	BEF-FA-036-063REC	2034225
	• **Description:** Mounting bracket for encoder with spigot 36 mm for face mount flange • **Items supplied:** Mounting kit included	BEF-WF-36	2029164
shaft adaptation			
	• **Product segment:** Shaft adaptation • **Product:** Shaft couplings • **Description:** Bellows coupling, shaft diameter 10 mm/10 mm; maximum shaft offset: radial +/- 0.25 mm, axial +/- 0.4 mm, angular +/- 4°; max. revolutions 10,000 rpm, –30° to +120 °C, max. torque 120 Ncm; material: stainless steel bellows, aluminum clamping hubs	KUP-1010-B	5312983

SICK AT A GLANCE

SICK is one of the leading manufacturers of intelligent sensors and sensor solutions for industrial applications. A unique range of products and services creates the perfect basis for controlling processes securely and efficiently, protecting individuals from accidents and preventing damage to the environment.

We have extensive experience in a wide range of industries and understand their processes and requirements. With intelligent sensors, we can deliver exactly what our customers need. In application centers in Europe, Asia and North America, system solutions are tested and optimized in accordance with customer specifications. All this makes us a reliable supplier and development partner.

Comprehensive services complete our offering: SICK LifeTime Services provide support throughout the machine life cycle and ensure safety and productivity.

For us, that is “Sensor Intelligence.”

WORLDWIDE PRESENCE:

Contacts and other locations –www.sick.com