CONNECTOR P/N	∅D (µm)	∅d (µm)	CONN. BODY COLOR	CONN. BOOT COLOR	CABLE TYPE
1060252250	125.5 +1.0/-0	1	BLUE	WHITE	SINGLE MODE
1060253250	127 +0.3/-0	3	BEIGE	WHITE	MULTIMODE
1060253260					
1060254250	125 +05/-0	1	BLUE	WHITE	SINGLEMODE
1060255250	126 +0.5/-0				
1060256250	125.25 +0.5/-0				
1060252270	125.5 +0.5/-0	0.5			
3 1060255260	126 +1.0/-0	1			
3 1060253270	127 +3/-0	3	BEIGE		MULTIMODE

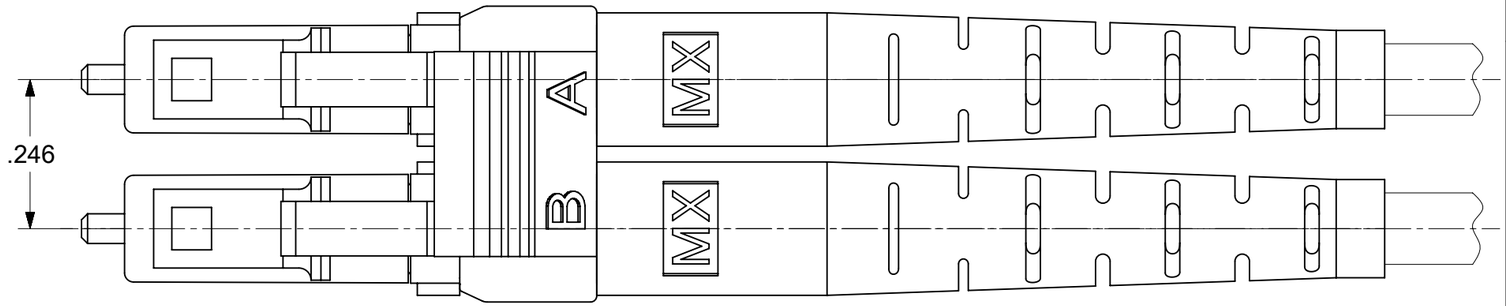

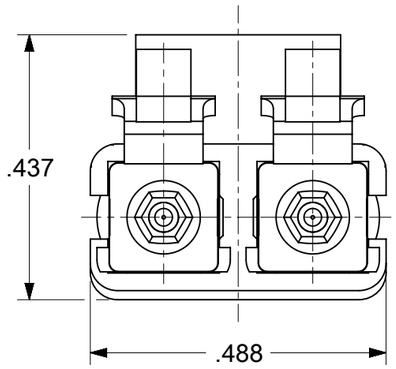

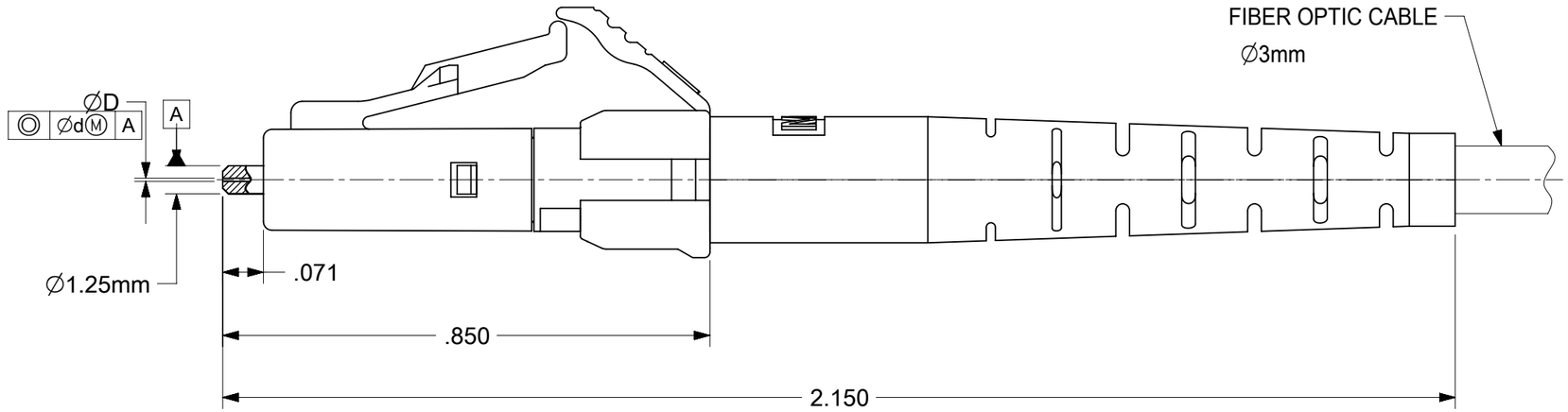

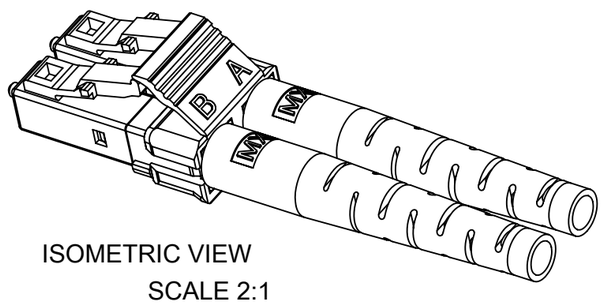

ISOMETRIC VIEW
SCALE 2:1

NOTES:
1. ALL DIMENSIONS ARE FOR REFERENCE ONLY.
2. DUST CAPS ARE NOT SHOWN.
3. P/N's 1060255260 AND 1060253270 ARE BULK PACKED IN QUANTITIES OF 100PCS.
4. TUBING P/N 86024-2012 MUST BE SHORTENED AFTER FILLING THE EPOXY ACCORDING TO THE TERMINATION PROCEDURE P/N PS-86028-2000

THIS DRAWING CONTAINS INFORMATION THAT IS PROPRIETARY TO MOLEX ELECTRONIC TECHNOLOGIES, LLC AND SHOULD NOT BE USED WITHOUT WRITTEN PERMISSION

DIMENSION UNITS	INCH
SCALE	4:1
GENERAL TOLERANCES (UNLESS SPECIFIED)	
ANGULAR TOL ±	0.5 °
4 PLACES ±	
3 PLACES ±	
2 PLACES ±	
1 PLACE ±	
0 PLACES ±	
DRAFT WHERE APPLICABLE MUST REMAIN WITHIN DIMENSIONS	

CURRENT REV DESC:

EC NO: 695254
DRWN: JHUANG18 2022/01/20
CHK'D: IGUMIN 2022/04/29
APPR: IGUMIN 2022/04/29

INITIAL REVISION:
DRWN: PGIBLIN 2006/02/07
APPR: IGUMIN 2006/02/07

THIRD ANGLE PROJECTION | DRAWING: B-SIZE | SERIES: 106025

molex

LC DUPLEX CONNECTOR
3MM CABLE APPLICATION

PRODUCT CUSTOMER DRAWING

DOCUMENT NUMBER	DOC TYPE	DOC PART	REVISION
SD-106025-X250	PSD	001	D

MATERIAL NUMBER	CUSTOMER	SHEET NUMBER
SEE TABLE	GENERAL MARKET	1 OF 1

DOCUMENT STATUS	P1	RELEASE DATE	2022/04/29 14:51:28

FORMAT: master-lb-prod-B
REVISION: J1
DATE: 2021/05/01