

Double sheet sensor

UDC-18GMA-400-3E1

- Ultrasonic system for reliable detection of no, one, or two overlapping sheet materials, preferably papers
- No teach-in required
- Function indicators visible from all directions
- Insensitive to printing, colors, and shining surfaces
- Material weight from 10 g/m² up to over 2000 g/m²
- Very wide material spectrum, finest papers up to thin sheet metals as well as plastic- and metal foils
- Perpendicular or inclined sensor mounting relative to the sheet plane possible
- Programmable

Dimensions

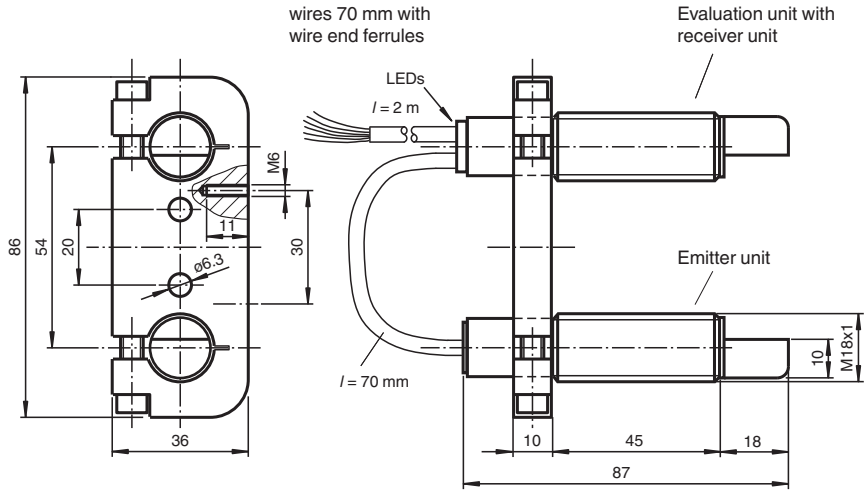

Technical Data

General specifications		
Sensing range		20 ... 60 mm , optimal distance: 45 mm
Transducer frequency		395 kHz
Indicators/operating means		
LED green		indication: single sheet detected
LED yellow		indication: no sheet detected (Air)
LED red		indication: double sheet detected
Electrical specifications		
Operating voltage	U_B	18 ... 30 V DC , ripple 10 %$_{SS}$
No-load supply current	I_0	< 80 mA
Time delay before availability	t_v	< 500 ms
Input		
Input type		Function input 0-level: -U_B ... -U_B + 1V 1-level: +U_B - 1 V ... +U_B
Pulse length		≥ 100 ms

Release date: 2025-06-16 Date of issue: 2025-06-18 Filename: 181166_eng.pdf

Technical Data

Impedance		≥ 4 kΩ
Output		
Output type		3 switch outputs NPN, NC
Rated operating current	I_e	3 x 100 mA , short-circuit/overload protected
Voltage drop	U_d	≤ 3 V
Switch-on delay	t_{on}	approx. 15 ms (shorter response time on request)
Switch-off delay	t_{off}	approx. 15 ms (shorter response time on request)
Pulse extension		min. 120 ms programmable
Compliance with standards and directives		
Standard conformity		
Standards		EN IEC 60947-5-2:2020 IEC 60947-5-2:2019
Approvals and certificates		
UL approval		cULus Listed, General Purpose, Class 2 Power Source
CCC approval		CCC approval / marking not required for products rated ≤36 V
Ambient conditions		
Ambient temperature		0 ... 60 °C (32 ... 140 °F)
Storage temperature		-40 ... 70 °C (-40 ... 158 °F)
Mechanical specifications		
Connection type		cable PVC , 2 m
Core cross section		0.14 mm²
Degree of protection		IP67
Material		
Housing		nickel plated brass; plastic components: PBT
Transducer		epoxy resin/hollow glass sphere mixture; polyurethane foam
Mass		150 g
Dimensions		
Length		74 mm
Diameter		18 mm
General information		
Supplementary information		Switch settings of the external programming adapter: "output load": pull-up "output logic": inv

Connection Assignment

Standard symbol/Connection:
Double sheet control

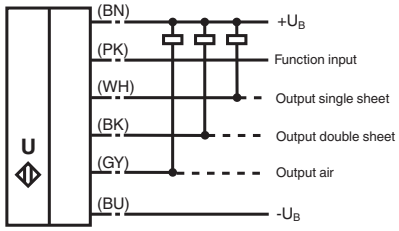

Release date: 2025-06-16 Date of issue: 2025-06-18 Filename: 181166_eng.pdf

Characteristic Curve

Mounting/Adjustment

Recommended distances

a = 5 ... 15 mm
b ≥ 10 mm

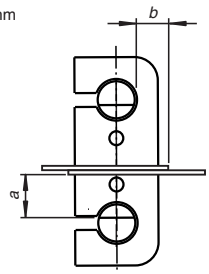

Mounting/Adjustment

(for very thick Papers)

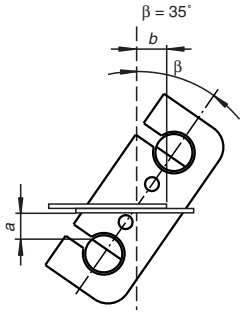

Release date: 2025-06-16 Date of issue: 2025-06-18 Filename: 181166_eng.pdf

Additional Information

Description of sensor functions

The ultrasonic double sheet monitor is used for double sheet detection in all situations in which the automatic distinction between double and single sheets is required in order to protect machines or avoid waste production. The double-sheet monitor is based on the ultrasonic through-beam principle. The following can be detected:

- No sheet, i.e. air,
- Individual sheet
- Double sheet

A microprocessor system evaluates the signals. The appropriate switch outputs are set as a result of the evaluation. Changes in ambient conditions such as temperature and humidity are compensated for automatically. The interface electronics is integrated into a compact M18 metal housing together with a sensor head.

Switching on

The sensor is equipped with 6 connections. The functionality of the connections is described in the following table. The function input (PK) is used to assign parameters to the sensor. (See Output pulse extension, Alignment aid and Program selection). During normal operation, the function input must always be securely connected with $+U_B$ or $-U_B$, to avoid possible interference or improper functionality.

Colour	Switching on	Comments
BN	$+U_B$	
WH	Switch output for single sheets	Pulse width corresponds to the event
BK	Switch output for double sheets	Pulse width corresponds to the event
GY	Switch output for air	Pulse width corresponds to the event
PK	$-U_B/+U_B$	Function input for parameter assignment/pulse prolongation
BU	-UB	

Normal mode

The sensor is working in normal mode if the function input (PK) is applied to $-U_B$ or $+U_B$ when the power source (Power-On) is supplied, as shown in the output pulse extension table (see below).
Displays:
LED yellow: Detection of air
LED green: Detection of single sheets
LED red: Detection of double sheets
Switch outputs:
The switch outputs are only active in normal operation!
White: WH Single sheet output
Black: BK Double sheet output
Gray: GY Air output

Output pulse extension

Switching the function input (PK) on to $-U_B$ or $+U_B$ makes it possible to select a minimum pulse width of 120 ms for all output pulses of the three switch outputs.

Switching on (PK)	Operating behaviour (after Power-On)
$-U_B$	No output pulse extension for switch outputs
$+U_B$	Output pulse extension of all switch outputs to at least 120 ms

Please note:
This can result in a condition in which more than one switch output is switched through!

Display Mode

The selected parameter assignment of the sensor can be displayed by switching the function input (PK) to voltage-free during normal operation. The green LED displays the program number (the number of flashing pulses (1 ... 4) = the program number). The outputs are inactive during this time.
If the function input (PK) is switched to voltage-free when power is supplied (Power-On), the sensor will also work in display mode. If the unit is switched to voltage-free while the function input (PK) is in operation due to an error (broken cable, coming loose because of vibration), display mode acts as a fault display.

Parameter assignment

The sensor is equipped with 4 programs for different ranges of application. This makes it possible to work with a wide range of material. The user can select the program best suited for a specific application.
The default setting, Program 1, is designed so that no change in the setting is required for most applications.

Release date: 2025-06-16 Date of issue: 2025-06-18 Filename: 181166_eng.pdf

Programs

Program number	Notes:	Range of materials
1	Default setting, standard paper	**20 - 1200 g/m²**
2	Thick paper, cardboard, fine corrugated boards(DIN 55 468--1)and thin sheet metal**	**> 100 g/m²**
3	Thin paper	**20 – 250 g/m²**
4	Extremely fine paper	**< 40 g/m²**

*) The measurements were made under the following conditions: d = 45 mm, a = 10 mm, β = 0°
*) The measurements were made under the following conditions: d = 45 mm, a = 10 mm, β = 35°

Procedure for assigning parameters

It is possible to switch to additional parameter assignment modes from the display mode:

Alignment mode -->
Program selection mode -->
Alignment aid mode --> (for checking)

When the function input (PK) is applied to $-U_B$ (for > 500 ms), the mode changes. When the "Program selection“ mode is active, switching on function input (PK) on to $+U_B$ (for > 500 ms) selects the next program level.
Disconnecting the power supply causes the system to exit the current mode with the selected program change.
The switch outputs are not active while parameters are being assigned to the sensor!

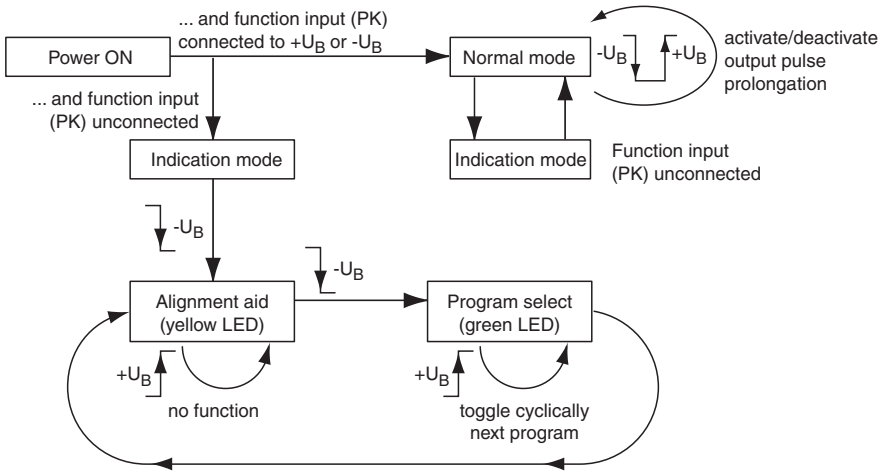

Modes

Amplitude control

During installation, the amplitude control can be used to check whether the ultrasonic amplitude at the receiver is sufficient. If the transmitter is not aligned properly in relation to the receiver, maximum sound energy is not transmitted to the receiver, which may result in the incorrect detection of materials.
When the sensor detects an area of air (yellow LED lights up), the UDC begins to display the strength of the measured amplitude signal:

- if the signal is weak, the yellow LED flashes at low frequency
- the flashing frequency increases in line with the signal strength
- the yellow LED lights up continuously when the signal strength is sufficient.

The single sheet function (green LED) and double sheet function (red LED) are now active. This can be used to check the correct function of the sensor.

Program selection

In the program selection mode, the current program is displayed by the green LED (number of flashing pulses = program number). Applying the adjustment input (PK) to $+U_B$ (for > 500 ms) causes the next program to be selected in cyclic sequence (program 1 follows through to program 4).

Notes:

A complete device consists of an ultrasonic emitter and an evaluation unit with an ultrasonic emitter. The sensor heads are optimally adjusted to each other when they leave the factory. Therefore, they must not be used separately or exchanged with other devices of the same type. The plug connector on the emitter/receiver connection cable is only intended to be used for easier mounting, not to replace units.

Very light papers (for example handkerchiefs) or perforated papers are not always suitable for double sheet detection because of their physical characteristics.

Release date: 2025-06-16 Date of issue: 2025-06-18 Filename: 181166_eng.pdf

If two or more double sheet controls are used in the immediate vicinity of each other, there may be mutual interference between them, which can result in improper functionality of the devices. Mutual interference can be prevented by introducing suitable countermeasures when planning systems.

When installing, care has to be taken that the ultrasonic signal cannot pass around the material that is to be detected, due to multiple reflections. This can happen if large surfaces are present at right angles to the direction of sound propagation. This can be the case if unsuitable mounting brackets are used, or if assemblies with large surface are part of the machine. In the latter case such machine parts should be covered by sound absorbing material or a different location for the installation should be chosen.

Parameterization

Parameterization using *PACTware* DTM

The double sheet sensor can be connected using a V15S-G-0.3M-PUR-WAGO terminal adapter.



Connect the sensor to the terminal adapter according to the table below.

Terminal adapter wire color	Sensor cable wire color
Brown	Brown
Blue	Blue
Black	Black
Gray	Pink

The sensor features a time lock. If no communication request occurs, the time lock blocks parameterization of the sensor 30 seconds after the supply voltage is connected. Start PACTware before switching on the sensor so that the communication request can be made in time.

Release date: 2025-06-16 Date of issue: 2025-06-18 Filename: 181166_eng.pdf