Horns and Sirens / Heavy-Duty multi-tone sounder

Multi-t.sounder WM 42 tne 18-30VDC GY



Part No.: 142.100.55

MECHANICAL DATA	
Length	155 mm
Width	168 mm
Height	168 mm
Materials	PC/ABS
Housing colour	Grey
Protection category	IP66
Connection	Screw terminals
cross-sectional area maximum	2,50mm² / 14AWG
Cable entry	Screwed cable gland
Cable entry minimum	d = 8 mm
Cable entry maximum	d = 12 mm
Tension relief	Present (conforms to VDE)
Type of fixing	Wall mounting
Working temperature minimum	-25°C
Working temperature maximum	+75°C
Weight with packaging	1829 g
Product weight	1667 g

ELECTRICAL DATA	
Operating voltage	18-30V
Operating voltage type	DC
Operating voltage tolerance	+/- 0%
Rated operational voltage	24 VDC
Rated operational current	450 mA
Protection class	Protection class 2
Pollution degree	3

ACOUSTIC DATA	
Volume (max) at 1m distance	120,0 dB (A)
Acoustic signal image	Multi-tone
Number of tones	42 tone
Acoustic service life	5,000 h minimum

APPROVAL DATA	
Conforms with CE	Yes
Conforms with RoHS directive	Yes
WEEE	No
Conforms with ATEX-directive	No
Conforms with CCC	No

! For additional installation and mounting information, refer to the appropriate user guide at www.werma.com. This printed copy is for information only and is subject to alteration.

Horns and Sirens / Heavy-Duty multi-tone sounder

Multi-t.sounder WM 42 tne 18-30VDC GY

Conforms with UL	No
Conforms with FCC	No
Conforms with IC	No
EAC certificate available	Yes
Conforms with AS-I	No
ICAO Certification	No
Conforms with DNV	No
Conforms with RoHS CN	No
Conforms with VdS	No

DRAWING

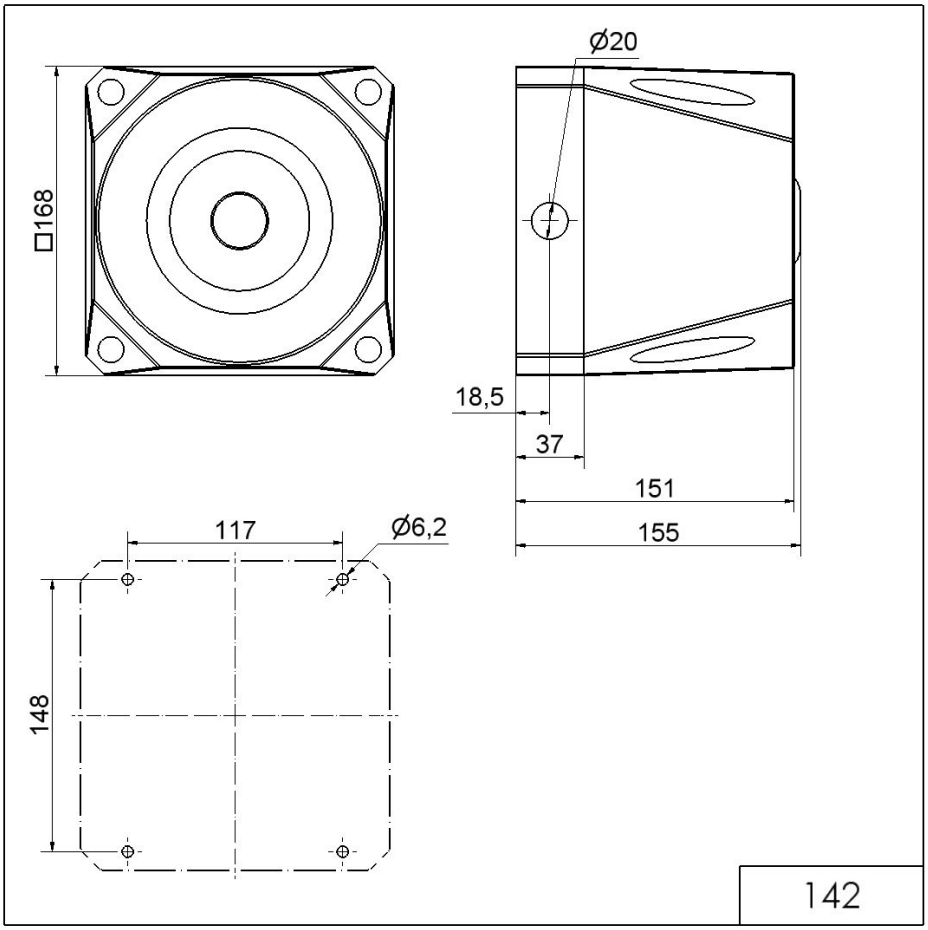

! For additional installation and mounting information, refer to the appropriate user guide at www.werma.com. This printed copy is for information only and is subject to alteration.