

Picture differs from the item.

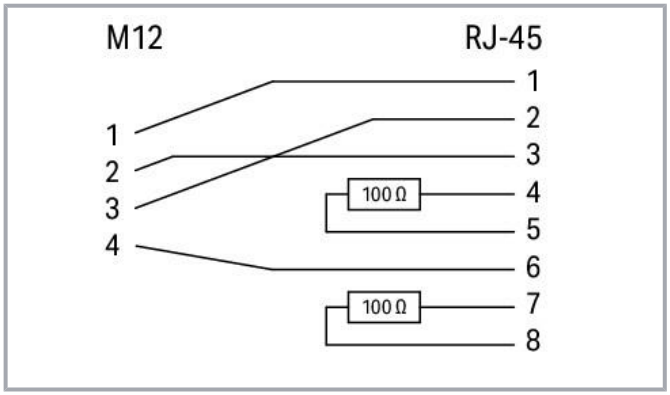

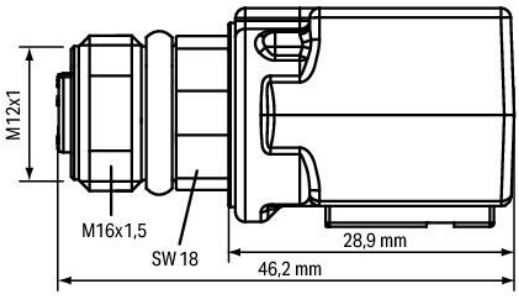

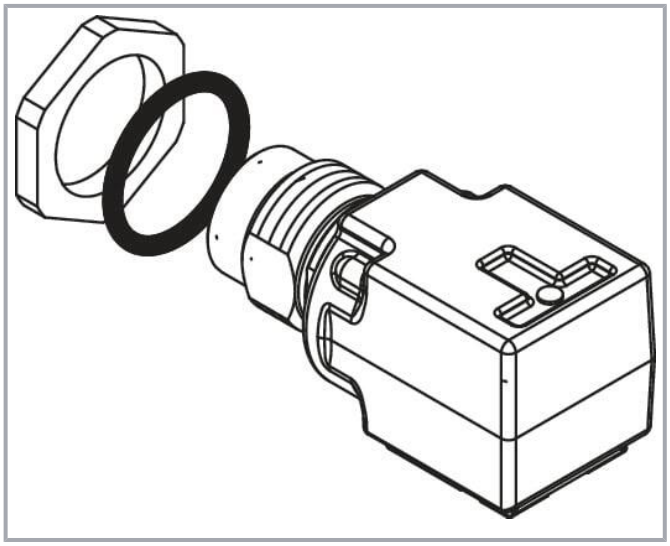

WAGO GmbH & Co. KG
Hansastr. 27
32423 Minden
Phone: +49571 887-0 | Fax: +49571 887-169
Email: info.de@wago.com | Web: www.wago.com

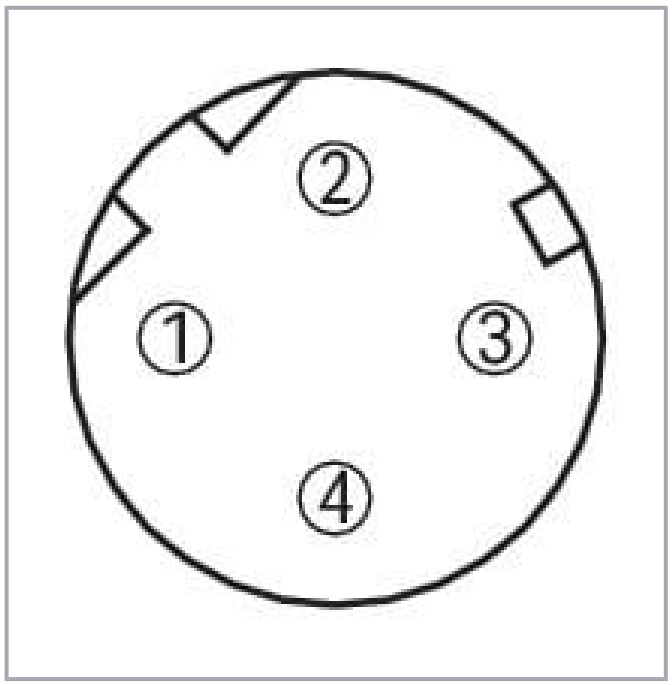

Data

Technical data

Connection type	M12 socket - RJ-45 socket
Pole number	4
Cable connection direction to mating direction	0 °
Cable connection direction to mating direction (2)	90 °
Connector interface coding (cable/adapter) 1 1	D-coded
Communication/fieldbus	ETHERNET
Communication/fieldbus (2)	PROFINET

Mechanical Data

Weight	37.5 g

Environmental requirements

Protection type	IP67

Commercial data

eCl@ss 10.0	27-24-26-92
eCl@ss 9.0	27-24-26-92

Subject to changes. Please also observe the further product documentation!

WAGO GmbH & Co. KG
Hansastr. 27
32423 Minden
Phone: +49571 887-0 | Fax: +49571 887-169
Email: info.de@wago.com | Web: www.wago.com

Do you have any questions about our products?
We are always happy to take your call at +49 (571) 887-44222.

ETIM 8.0	EC002584
ETIM 7.0	EC002584
ECCN	NO DATA
PU (SPU)	1 pcs
Packaging type	box
Country of origin	DE
GTIN	4045454521912
Customs tariff number	85366990990

Environmental Product Compliance

RoHS Compliance Status	Compliant,No Exemption

Downloads

CAD/CAE-Data

CAE data

WSCAD Universe 756-9503/040-000	URL	Download
WSCAD Universe 756-9503/040-000	URL	Download

Environmental Product Compliance

Compliance Search

Environmental Product Compliance 756-9503/040-000 Accessories; 4-pole	URL	Download

Installation Notes

WAGO GmbH & Co. KG
Hansastr. 27
32423 Minden
Phone: +49571 887-0 | Fax: +49571 887-169
Email: info.de@wago.com | Web: www.wago.com