PLT-SEC-T3-120-FM-UT - Type 3 surge protection device

2907918

https://www.phoenixcontact.com/us/products/2907918

Please be informed that the data shown in this PDF document is generated from our online catalog. Please find the complete data in the user documentation. Our general terms of use for downloads are valid.



Type 2/3 surge protection, consisting of protective plug and base element, with integrated status indicator and remote signaling for single-phase power supply networks. Nominal voltage: 120 V AC/DC

Your advantages

- Surge protection family for universal use with optimum energy coordination from the lightning current arrester to the device protection
- Easy to maintain due to consistently pluggable protection modules
- Excellent level of information provided by mechanical/visual status indicator and remote indication contact
- Your preferred connection technology can be selected as both screw connection and Push-in connection are available
- Optimal additional protection of the industrial power supply for a longer service life and increased availability of the system
- 5-year warranty on your QUINT 4 power supply when installed together with PLT-SEC, see document in the download area

Commercial data

Item number	2907918
Packing unit	5 pc
Minimum order quantity	5 pc
Sales key	CL19
Product key	CL14A2
Catalog page	Page 83 (C-4-2019)
GTIN	4055626257440
Weight per piece (including packing)	96.91 g
Weight per piece (excluding packing)	81.16 g
Customs tariff number	85363030
Country of origin	DE

Technical data

Product properties

Product type	Device protection
Product family	SEC Family
IEC power supply system	TN-S
	TT
Type	DIN rail module, two-section, divisible
Number of positions	2
Surge protection fault message	Optical, remote indicator contact

Insulation characteristics

Overvoltage category	III
Pollution degree	2
IEC test classification	II / III
	T2 / T3
EN type	T2 / T3
Number of ports	One

Electrical properties

Indicator/remote signaling

Connection name	Remote fault indicator contact
Switching function	Changeover contact
Operating voltage	250 V AC
	125 V DC (200 mA DC)
Operating current	0.5 A AC
	0.5 A DC (75 V DC)

Connection data

Connection method	Screw connection
Screw thread	M3
Tightening torque	0.5 Nm
Conductor cross section flexible	0.2 mm² ... 2.5 mm²
Conductor cross section rigid	0.2 mm² ... 4 mm²
Conductor cross section AWG	24 ... 12

Dimensions

Dimensional drawing	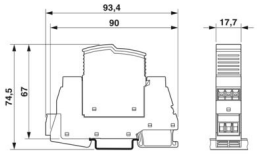
Width	17.7 mm

Height	93.4 mm
Depth	74.5 mm (incl. DIN rail 7.5 mm)
Horizontal pitch	1 Div.

Material specifications

Color (Male connector)	light grey (RAL 7035)
Color (Base element)	gray (RAL 7042)
Flammability rating according to UL 94	V-0
CTI value of material	600
Insulating material	PA 6.6-FR 20 % GF
	PA 6.6-FR
Housing material	PA 6.6-FR 20 % GF
	PA 6.6-FR

Protective circuit

Mode of protection	L-N
	L-PE
	N-PE
Direction of action	1L-N & N-PE
Nominal voltage U_N	120 V AC (TN-S)
	120 V AC (TT)
Nominal frequency f_N	50 Hz (60 Hz)
Maximum continuous voltage U_C	150 V AC
Rated load current I_L	26 A (at 30 °C)
Residual current I_{PE}	≤ 5 µA
Standby power consumption P_C	≤ 10.60 mVA (at U_{REF})
	≤ 13.50 mVA (at U_C)
Reference test voltage U_{REF}	132.00 V AC
Nominal discharge current I_n (8/20) µs	5 kA
Maximum discharge current I_{max} (8/20) µs	10 kA
Combination wave U_{OC}	6 kV
Voltage protection level U_p (L-N)	≤ 0.75 kV (at U_{OC})
	≤ 0.95 kV (at I_n)
Voltage protection level U_p (L-PE)	≤ 0.85 kV
Voltage protection level U_p (N-PE)	≤ 0.85 kV
TOV behavior at U_T (L-N)	240 V AC (5 s / withstand mode)
	240 V AC (120 min / withstand mode)
TOV behavior at U_T (L-PE)	240 V AC (5 s / withstand mode)
	240 V AC (120 min / withstand mode)
	1332 V AC (200 ms / safe failure mode)
TOV behavior at U_T (N-PE)	1200 V AC (200 ms / safe failure mode)
Response time t_A (L-N)	≤ 25 ns
Response time t_A (L-PE)	≤ 100 ns
Response time t_A (N-PE)	≤ 100 ns

Short-circuit current rating I_{SCCR}	10 kA AC
Max. backup fuse with branch wiring	32 A (gG / B / C)

Additional technical data

Short-circuit current rating I_{SCCR}	0.25 kA DC (Without additional backup fuse in the DC branch wiring)
	5 kA DC (for 20 A gG / B backup fuse)
Residual voltage U_{res} (L-N)	≤ 0.68 kV (at 2 kA)
	≤ 0.75 kV (at 3 kA)
	≤ 0.64 kV (at U_{OC} = 4 kV)
Residual voltage U_{res} (L-PE)	≤ 0.58 kV (at 2 kA)
	≤ 0.65 kV (at 3 kA)
	≤ 0.75 kV (at U_{OC} = 4 kV)
Residual voltage U_{res} (N-PE)	≤ 0.58 kV (at 2 kA)
	≤ 0.65 kV (at 3 kA)
	≤ 0.75 kV (at U_{OC} = 4 kV)
Maximum continuous voltage U_C	150 V DC
Mode of protection	(DC+) - (DC-)
	(DC+/DC-) - PE
IEC test classification (in accordance with IEC 61643-21)	D1
Impulse durability (wire-wire)	D1 - 500 A
Impulse durability (line-earth)	D1 - 500 A
Pulse discharge current I_{imp} (10/350) µs (line-line)	0.5 kA
Pulse discharge current I_{imp} (10/350) µs (line-earth)	0.5 kA

Environmental and real-life conditions

Ambient conditions

Degree of protection	IP20
Ambient temperature (operation)	-40 °C ... 80 °C
Ambient temperature (storage/transport)	-40 °C ... 80 °C
Altitude	≤ 2000 m (operating voltage remote contact ≤ 250 V)
	≤ 6000 m (operating voltage remote contact ≤ 150 V)
Permissible humidity (operation)	5 % ... 95 %
Shock (operation)	30g (Half-sine / 11 ms / 3x ±X, ±Y, ±Z)
Vibration (operation)	5g (5 ... 500 Hz / 2.5 h / X, Y, Z)

Approvals

UL specifications

Maximum continuous operating voltage MCOV	150 V AC
	150 V DC
Short-circuit current rating (SCCR)	10 kA AC
	5 kA DC
Voltage protection rating VPR (L-N)	700 V
Voltage protection rating VPR (L-G)	700 V

Voltage protection rating VPR (N-G)	900 V
Voltage protection rating VPR (DC+) - (DC-)	700 V
Voltage protection rating VPR (DC+) - G	900 V
Voltage protection rating VPR (DC-) - G	900 V
Nominal discharge current I_n	5 kA
Mode of protection	L-N
	L-G
	N-G
	(DC+) - (DC-)
	(DC+) - G
	(DC-) - G
Nominal voltage	150 V DC
Rated load current I_L	20 A
Power distribution system	Single phase
	DC
Nominal frequency	50/60 Hz
SPD Type	2 (Open-Type SPD)

UL indicator/remote signaling

Operating voltage	250 V AC (0.5 A)
DC operating voltage	12 V DC (4 A)
	24 V DC (2 A)
	48 V DC (1 A)

UL connection data

Tightening torque	4.4 lb_f-in.
Conductor cross section AWG	16 ... 12

Standards and regulations

Standards/specifications	IEC 61643-11
Note	2011

EN 61643-11

Standards/specifications	EN 61643-11
Note	2012

Mounting

Mounting type	DIN rail: 35 mm

Drawings

Dimensional drawing

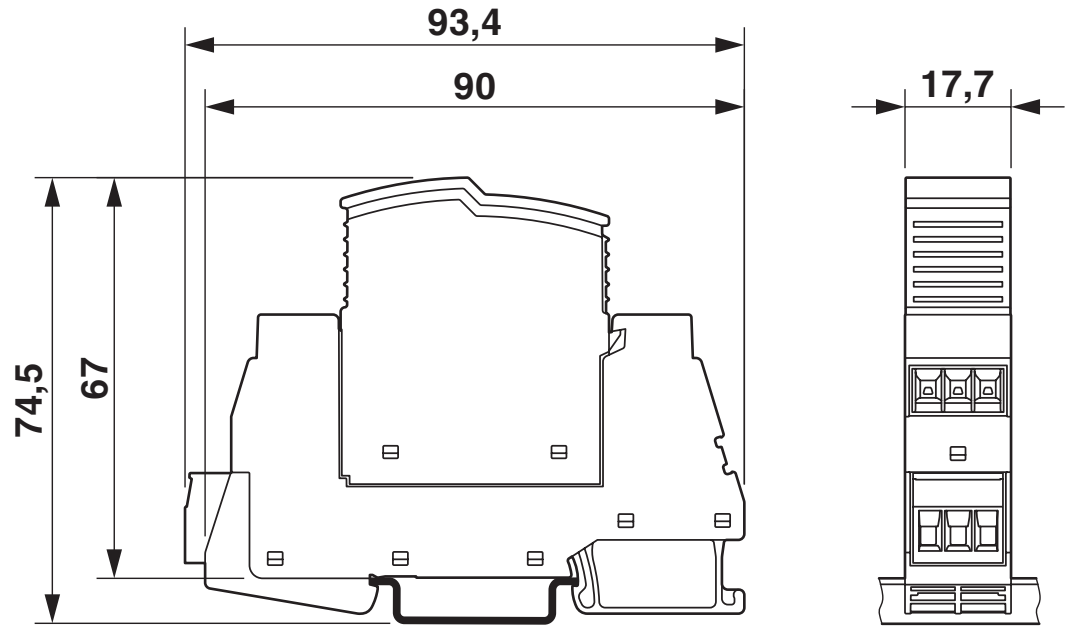

Diagram

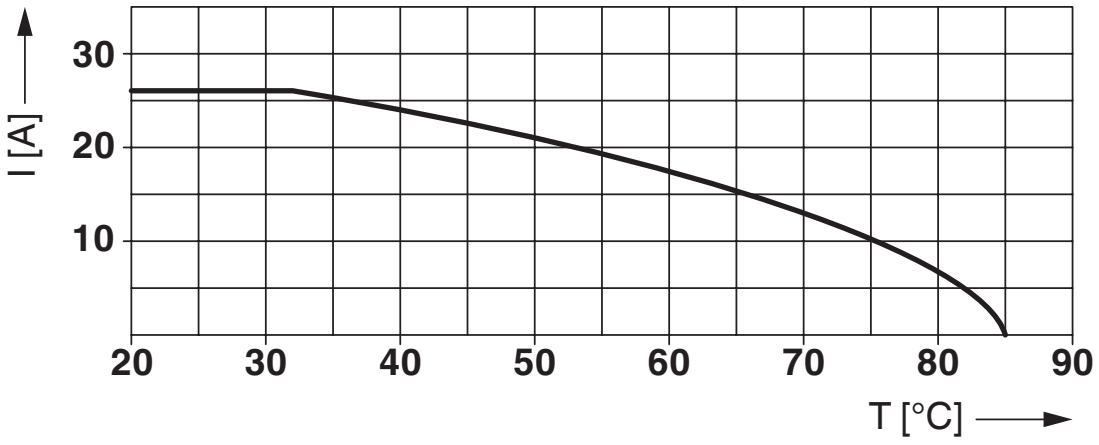

Nominal current depending on ambient temperature

Circuit diagram

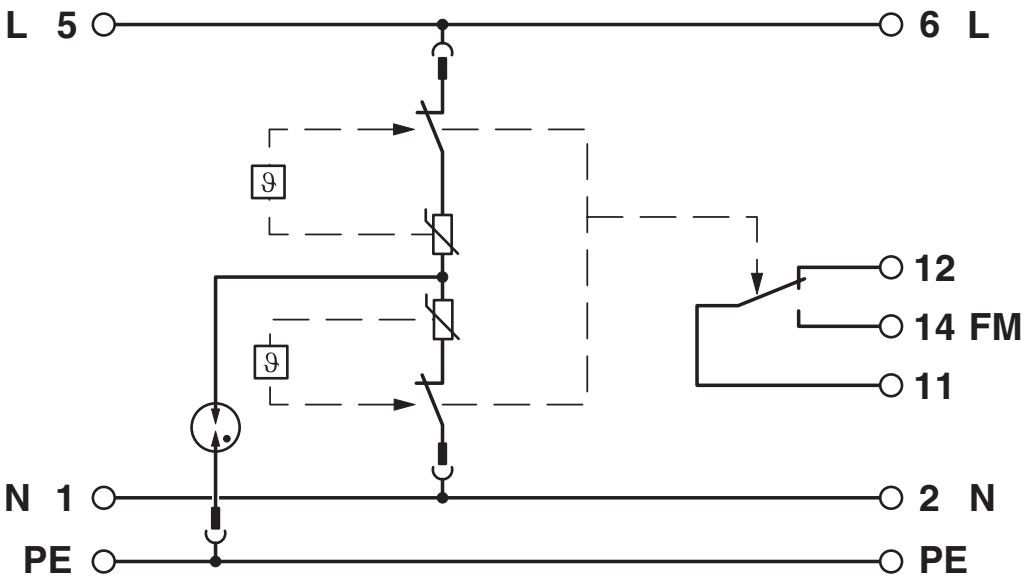

Approvals

To download certificates, visit the product detail page: https://www.phoenixcontact.com/us/products/2907918

IECEE CB Scheme
Approval ID: NL-51083

EAC
Approval ID: RU C-DE.*09.B.00169

CCA
Approval ID: NTR-NL 7676

KEMA-KEUR
Approval ID: 71-103027

UL Listed
Approval ID: FILE E 330181

CSA
Approval ID: 13631

cUL Listed
Approval ID: FILE E 330181

UAE-RoHS
Approval ID: 23-10-88891

DNV
Approval ID: TAE00002U7

cUL Recognized
Approval ID: FILE E 340736

UL Recognized
Approval ID: FILE E 340736

cULus Listed

cULus Recognized

Classifications

ECLASS

ECLASS-11.0	27130806
ECLASS-13.0	27171203

ETIM

ETIM 9.0	EC000942

UNSPSC

UNSPSC 21.0	39121600

Environmental product compliance

EU RoHS

Fulfills EU RoHS substance requirements	Yes, No exemptions

China RoHS

Environment friendly use period (EFUP)	EFUP-E
	No hazardous substances above the limits

EU REACH SVHC

REACH candidate substance (CAS No.)	No substance above 0.1 wt%

Accessories

CLIPFIX 35 - End bracket

3022218

https://www.phoenixcontact.com/us/products/3022218



Quick mounting end clamp for NS 35/7,5 DIN rail or NS 35/15 DIN rail, with marking option, width: 9.5 mm, color: gray

EML (20XE)R - Label

0803452

https://www.phoenixcontact.com/us/products/0803452



Label, Roll, white, unlabeled, can be labeled with: THERMOMARK E.300 (D)/600 (D), THERMOMARK ROLL 2.0, THERMOMARK ROLL, THERMOMARK ROLL X1, THERMOMARK ROLLMASTER 300/600, THERMOMARK X1.2, mounting type: adhesive, lettering field size: continuous x 20 mm, Number of individual labels: 1

EML (20XE)R YE - Label

0803453

https://www.phoenixcontact.com/us/products/0803453



Label, Roll, yellow, unlabeled, can be labeled with: THERMOMARK E.300 (D)/600 (D), THERMOMARK ROLL 2.0, THERMOMARK ROLL, THERMOMARK ROLL X1, THERMOMARK ROLLMASTER 300/600, THERMOMARK X1.2, mounting type: adhesive, lettering field size: continuous x 20 mm, Number of individual labels: 1

X-PEN 0,35 - Marker pen

0811228

https://www.phoenixcontact.com/us/products/0811228



Marker pen without ink cartridge, for manual labeling of markers, labeling extremely wipe-proof, line thickness 0.35 mm

SZS 0,6X3,5 VDE - Screwdriver

1212602

https://www.phoenixcontact.com/us/products/1212602



Screwdriver, slot-headed, VDE insulated, size: 0.6 x 3.5 x 100 mm, 2-component grip, with non-slip grip

PLT-SEC-T3-120-P-UT/PT - Type 3 surge protection plug

2907922

https://www.phoenixcontact.com/us/products/2907922



Replacement plug for type 2/3 surge protection from the PLT-SEC-…-UT/PT product series. Nominal voltage 120 V.

PLT-SEC-T3-120-FM-UT - Type 3 surge protection device

2907918

https://www.phoenixcontact.com/us/products/2907918

PLT-SEC-T3-BE-FM-UT - Type 3 surge protection base element

2907924

https://www.phoenixcontact.com/us/products/2907924

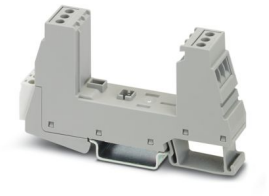

Base element for protective plugs from the PLT-SEC-...-UT/PT product series with remote indication contact.

Phoenix Contact 2024 © - all rights reserved
https://www.phoenixcontact.com

Phoenix Contact USA
586 Fulling Mill Road
Middletown, PA 17057, United States
(+717) 944-1300
info@phoenixcon.com