Data sheet

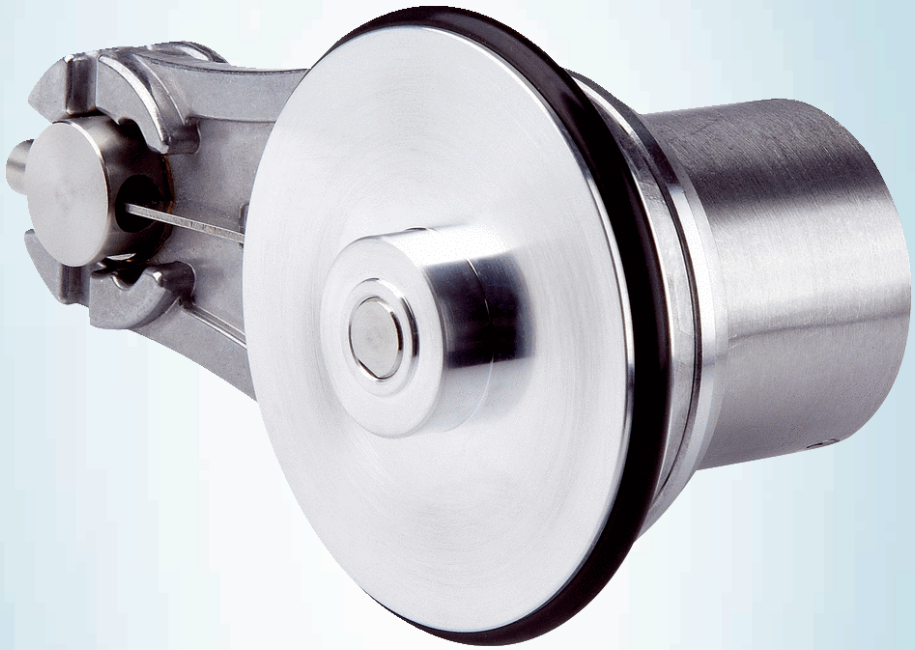

DBV50E-22GPA2000

DBV50

MEASURING WHEEL ENCODERS

SICK
Sensor Intelligence.

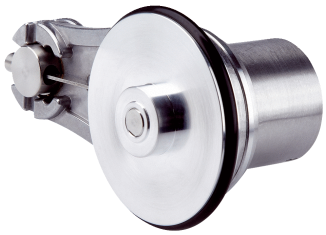

Illustration may differ

Ordering information

Type	part no.
DBV50E-22GPA2000	1099521

Other models and accessories ➜ www.sick.com/DBV50

Detailed technical data

Safety-related parameters

$MTTF_D$ (mean time to dangerous failure)	600 years (EN ISO 13849-1) [1]

[1] This product is a standard product and does not constitute a safety component as defined in the Machinery Directive. Calculation based on nominal load of components, average ambient temperature 40 °C, frequency of use 8760 h/a. All electronic failures are considered hazardous. For more information, see document no. 8015532.

Performance

Pulses per revolution	2,000
Resolution in pulses/mm	10
Measuring increment (resolution in mm/pulse)	0.1
Measuring step deviation	± 18° / pulses per revolution
Error limits	± 4 mm/m, subject to the measuring wheel (wheel + surface)
Duty cycle	≤ 0.5 ± 5 %
Initialization time	< 3 ms

Interfaces

Communication interface	Incremental
Communication Interface detail	HTL / Push pull
Number of signal channels	3 channel

Electrical data

Operating power consumption (no load)	50 mA
Connection type	Cable, 8-wire, with male connector, M12, 8-pin, universal, 0.5 m
Power consumption max. without load	≤ 0.5 W
Supply voltage	7 V ... 27 V
Load current max.	30 mA
Maximum output frequency	≤ 300 kHz
Reference signal, number	1
Reference signal, position	90°, electric, logically gated with A and B

[1] The short-circuit rating is only given if Us and GND are connected correctly.

Reverse polarity protection	✓
Short-circuit protection of the outputs	1)

1) The short-circuit rating is only given if Us and GND are connected correctly.

Mechanical data

Measuring wheel circumference	200 mm
Measuring wheel surface	O-ring NBR70 1)
Spring arm design	63.5 mm spring arm, encoder on mounting side (left), single wheel
Mass	+ 300 g
Encoder material	
Shaft	Stainless steel
Flange	Aluminum
Housing	Aluminum
Cable	PVC
Spring arm mechanism material	
Spring element	Spring steel, anti-corrosive
Measuring wheel, spring arm	Aluminum
Start up torque	0.9 Ncm (at 20 °C)
Operating torque	0.6 Ncm (at 20 °C)
Operating speed	1,500 min^{-1}
Maximum operating speed	3,000 min^{-1} 2)
Bearing lifetime	2.0 x 10^9 revolutions
Maximum travel/deflection of spring arm	14 mm at 14 N spring travel
Recommended pretension	15 N At 10 mm deflection 3)
Max. permissible working area for the spring (continuous operation)	± 3 mm
Recommended spring deflection	2 mm ... 13 mm
Service life of spring element	> 1.4 million cycles 4)
Mounting position relative to the measuring object	Preferably from above, from below possible 5)

1) The surface of a measuring wheel is subject to wear. This depends on contact pressure, acceleration behavior in the application, traversing speed, measurement surface, mechanical alignment of the measuring wheel, temperature, and ambient conditions. We recommend you regularly check the condition of the measuring wheel and replace as required.

2) No permanent operation. Decreasing signal quality.

3) When measured from the top of the measuring surface.

4) One cycle corresponds to an upward and downward movement of ± 3 mm from the recommended pretension position.

5) When mounted from below, the encoder weight during spring pretensioning must be taken into account.

Ambient data

EMC	According to EN 61000-6-2 and EN 61000-6-3 (class A)
Enclosure rating	IP65
Permissible relative humidity	90 % (Condensation not permitted)
Operating temperature range	–20 °C ... +70 °C
Storage temperature range	–40 °C ... +100 °C, without package

Certificates

EU declaration of conformity	✓
UK declaration of conformity	✓
ACMA declaration of conformity	✓
China-RoHS	✓
cRUus certificate	✓

Classifications

ECLASS 5.0	27270501
ECLASS 5.1.4	27270501
ECLASS 6.0	27270590
ECLASS 6.2	27270590
ECLASS 7.0	27270501
ECLASS 8.0	27270501
ECLASS 8.1	27270501
ECLASS 9.0	27270501
ECLASS 10.0	27270790
ECLASS 11.0	27270707
ECLASS 12.0	27270504
ETIM 5.0	EC001486
ETIM 6.0	EC001486
ETIM 7.0	EC001486
ETIM 8.0	EC001486
UNSPSC 16.0901	41112113

Dimensional drawing 63.5 mm spring arm, encoder on mounting side (left), single wheel

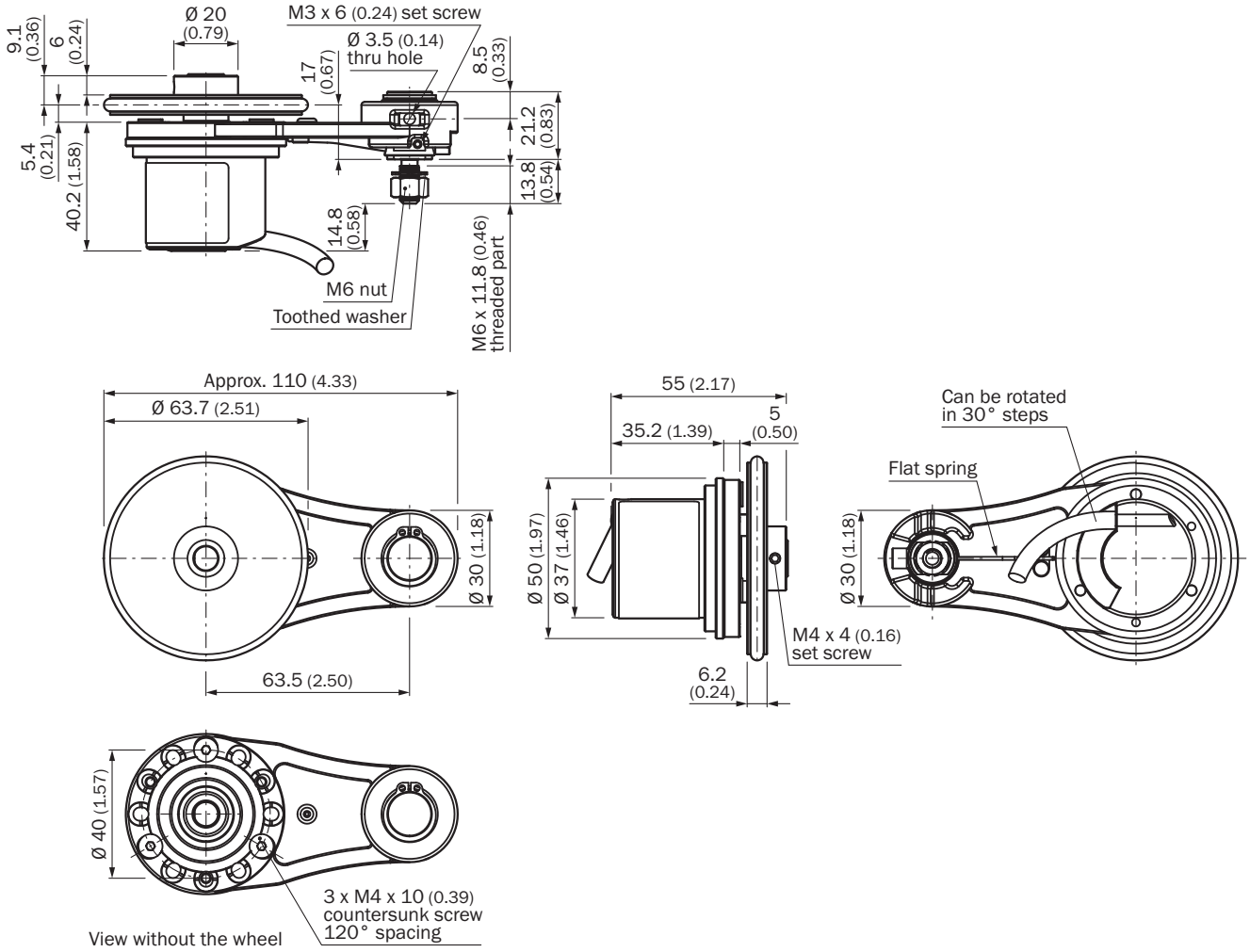

Dimensions in mm (inch)

Attachment specifications

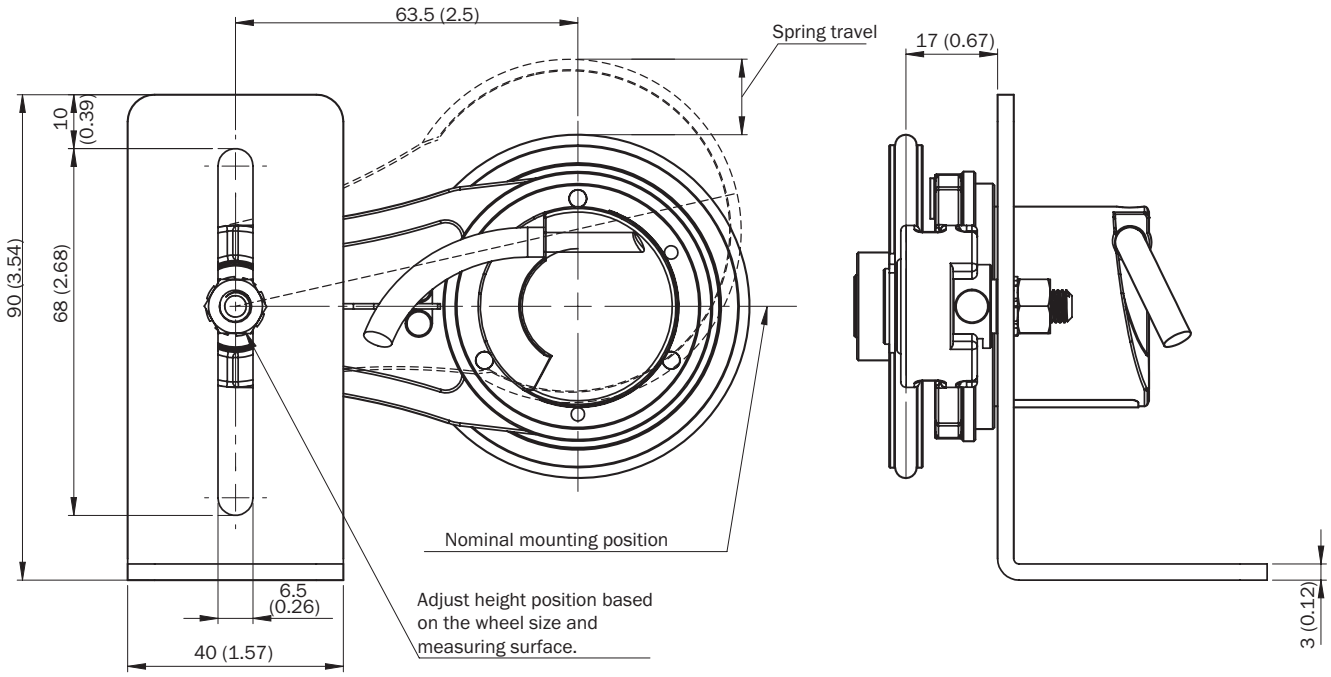

PIN assignment

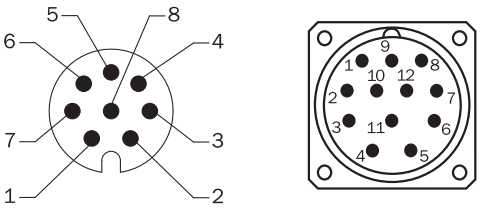

view of M12 male device connector on cable / housing

Diagrams Force deflection chart with working range

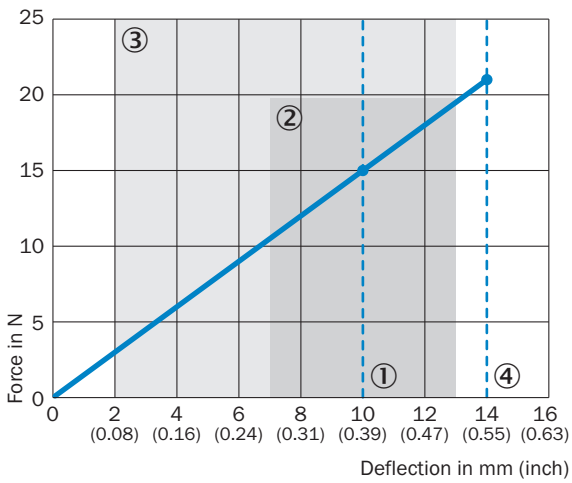

① Proposed Pre-tension: 10 mm
② Allowed operating travel (continuous operation) +/- 3 mm
③ Proposed spring deflection: 2 - 13 mm
④ Maximum spring travel: 14 mm

Diagrams Signal outputs for electrical interfaces TTL and HTL

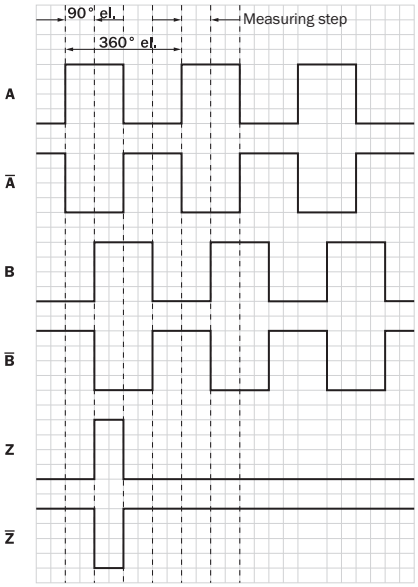

CW with view on the encoder shaft , compare dimensional drawing.
Interfaces G, P, R perform only the channels A, B, Z.

Recommended accessories

Other models and accessories ➜ www.sick.com/DBV50

	Brief description	Type	part no.
connectors and cables			
	• **Connection type head A:** Female connector, M12, 8-pin, straight • **Connection type head B:** Flying leads • **Signal type:** Incremental, SSI • **Cable:** 2 m, 8-wire, PUR, halogen-free • **Description:** Incremental, shieldedSSI • **Connection systems:** Flying leads	DOL-1208-G02MAC1	6032866
	• **Connection type head A:** Female connector, M12, 8-pin, straight • **Connection type head B:** Flying leads • **Signal type:** Incremental, SSI • **Cable:** 5 m, 8-wire, PUR, halogen-free • **Description:** Incremental, shieldedSSI • **Connection systems:** Flying leads	DOL-1208-G05MAC1	6032867
	• **Connection type head A:** Female connector, M12, 8-pin, straight • **Connection type head B:** Flying leads • **Signal type:** Incremental, SSI • **Cable:** 10 m, 8-wire, PUR, halogen-free • **Description:** Incremental, shieldedSSI • **Connection systems:** Flying leads	DOL-1208-G10MAC1	6032868
	• **Connection type head A:** Female connector, M12, 8-pin, straight • **Connection type head B:** Flying leads • **Signal type:** Incremental, SSI • **Cable:** 20 m, 8-wire, PUR, halogen-free • **Description:** Incremental, shieldedSSI • **Connection systems:** Flying leads	DOL-1208-G20MAC1	6032869
	• **Connection type head A:** Female connector, M12, 8-pin, straight • **Connection type head B:** Flying leads • **Signal type:** Incremental, SSI • **Cable:** 25 m, 8-wire, PUR, halogen-free • **Description:** Incremental, shieldedSSI • **Connection systems:** Flying leads	DOL-1208-G25MAC1	6067859
	• **Connection type head A:** Flying leads • **Connection type head B:** Flying leads • **Signal type:** SSI, Incremental, HIPERFACE® • **Items supplied:** By the meter • **Cable:** 8-wire, PUR, halogen-free • **Description:** SSI, shieldedIncrementalHIPERFACE®	LTG-2308-MWENC	6027529
	• **Connection type head A:** Flying leads • **Connection type head B:** Flying leads • **Signal type:** SSI, Incremental • **Items supplied:** By the meter • **Cable:** 11-wire, PUR • **Description:** SSI, shieldedIncremental	LTG-2411-MW	6027530
	• **Connection type head A:** Flying leads • **Connection type head B:** Flying leads • **Signal type:** SSI, Incremental • **Items supplied:** By the meter • **Cable:** 12-wire, PUR, halogen-free • **Description:** SSI, shieldedIncremental	LTG-2512-MW	6027531
	• **Connection type head A:** Flying leads • **Connection type head B:** Flying leads • **Signal type:** SSI, TTL, HTL, Incremental • **Items supplied:** By the meter • **Cable:** 12-wire, UV and saltwater-resistant, PUR, halogen-free • **Description:** SSI, shieldedTTLHTLIncremental	LTG-2612-MW	6028516
	• **Connection type head A:** Male connector, M12, 8-pin, straight, A-coded • **Signal type:** Incremental • **Cable:** CAT5, CAT5e • **Description:** Incremental, shielded • **Connection systems:** IDC quick connection • **Permitted cross-section:** 0.14 mm² ... 0.34 mm²	STE-1208-GA01	6044892
	• **Connection type head A:** Male connector, M23, 12-pin, straight, A-coded • **Signal type:** HIPERFACE®, SSI, Incremental, RS-422 • **Description:** HIPERFACE®, shieldedSSIIncrementalRS-422	STE-2312-G	6027537

	Brief description	Type	part no.
	• **Connection systems:** Solder connection		
	• **Connection type head A:** Male connector, M23, 12-pin, straight, A-coded • **Signal type:** HIPERFACE®, SSI, Incremental • **Description:** HIPERFACE®, shieldedSSIIncremental • **Connection systems:** Solder connection	STE-2312-G01	2077273
measuring wheels and measuring wheel mechanics			
	• **Product segment:** Measuring wheels and measuring wheel mechanics • **Product family:** Measuring wheels • **Description:** Adapter flange for modular measuring wheel system	BEF-AP-MRS	2084969
	• **Product segment:** Measuring wheels and measuring wheel mechanics • **Product family:** Measuring wheels • **Description:** Mounting bracket for encoder with spigot 36 mm	BEF-WF-MRS	2084709
	• **Product segment:** Measuring wheels and measuring wheel mechanics • **Product family:** Measuring wheels • **Description:** Aluminium measuring wheel with O-ring (NBR70) for 8 mm solid shaft, circumference 200 mm	BEF-MR008020R	2055223
	• **Product segment:** Measuring wheels and measuring wheel mechanics • **Product family:** Measuring wheel mechanics • **Description:** O-ring for measuring wheels (circumference 200 mm)	BEF-OR-053-040	2064061

SICK AT A GLANCE

SICK is one of the leading manufacturers of intelligent sensors and sensor solutions for industrial applications. A unique range of products and services creates the perfect basis for controlling processes securely and efficiently, protecting individuals from accidents and preventing damage to the environment.

We have extensive experience in a wide range of industries and understand their processes and requirements. With intelligent sensors, we can deliver exactly what our customers need. In application centers in Europe, Asia and North America, system solutions are tested and optimized in accordance with customer specifications. All this makes us a reliable supplier and development partner.

Comprehensive services complete our offering: SICK LifeTime Services provide support throughout the machine life cycle and ensure safety and productivity.

For us, that is “Sensor Intelligence.”

WORLDWIDE PRESENCE:

Contacts and other locations –www.sick.com