HC-M-DSUB-09/2-CT-F - Contact insert module

1079793

https://www.phoenixcontact.com/us/products/1079793

Please be informed that the data shown in this PDF document is generated from our online catalog. Please find the complete data in the user documentation. Our general terms of use for downloads are valid.



HEAVYCON socket contact insert module, D-SUB 9, crimp connection, for two conductors, without crimp contact

Commercial data

Item number	1079793
Packing unit	1 pc
Minimum order quantity	1 pc
Sales key	BF62
Product key	BF7ACB
Catalog page	Page 587 (C-2-2019)
GTIN	4055626800431
Weight per piece (including packing)	35.1 g
Weight per piece (excluding packing)	35.1 g
Customs tariff number	85389099
Country of origin	CN

Technical data

Notes

General	For module carrier frames HC-M-B...-MF-H/HC-M-B...-MF-B, for two conductors
General	Connectors may be operated only when there is no load/voltage.
General	The use of guide pins (HC-CST) and sockets (HC-CBU) is recommended to prevent tip collision due to misalignment.

Mounting

Assembly instructions	To ensure correct use, installation in housing with IP54 protection or better is required

Product properties

Product type	Modular contact insert
Series	HC-M-DSUB-C
Application	Data
Number of positions	9
Connection profile	9
Contact numbering	1 - 9
Number of module slots	1
Type	D-SUB 9
Contact material type	turned

Insulation characteristics

Overvoltage category	III
Degree of pollution	3

Connection data

Connection technology

Connection technology	Crimp connection

Conductor connection

Conductor cross section	0.09 mm² ... 0.82 mm²
Connection cross section AWG	28 ... 18
Stripping length of the individual wire	4.2 mm

Dimensions

Dimensional drawing	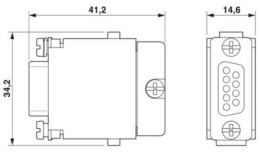
Width	34.2 mm
Height	35.7 mm

Length	14.6 mm

Mechanical characteristics

Minimum housing height	52 mm
Contact diameter	1 mm

Electrical properties

Rated voltage (III/3)	48 V
Rated surge voltage	0.8 kV
Rated current	5 A

Mechanical properties

Mechanical data

Insertion/withdrawal cycles	≥ 500

Material specifications

Material Line conductor	Zinc alloy
Flammability rating according to UL 94	V0
Contact material	Copper alloy
Contact surface material	Ag
Contact carrier material	PC

Environmental and real-life conditions

Ambient conditions

Ambient temperature (operation)	-40 °C ... 125 °C

Drawings

Dimensional drawing

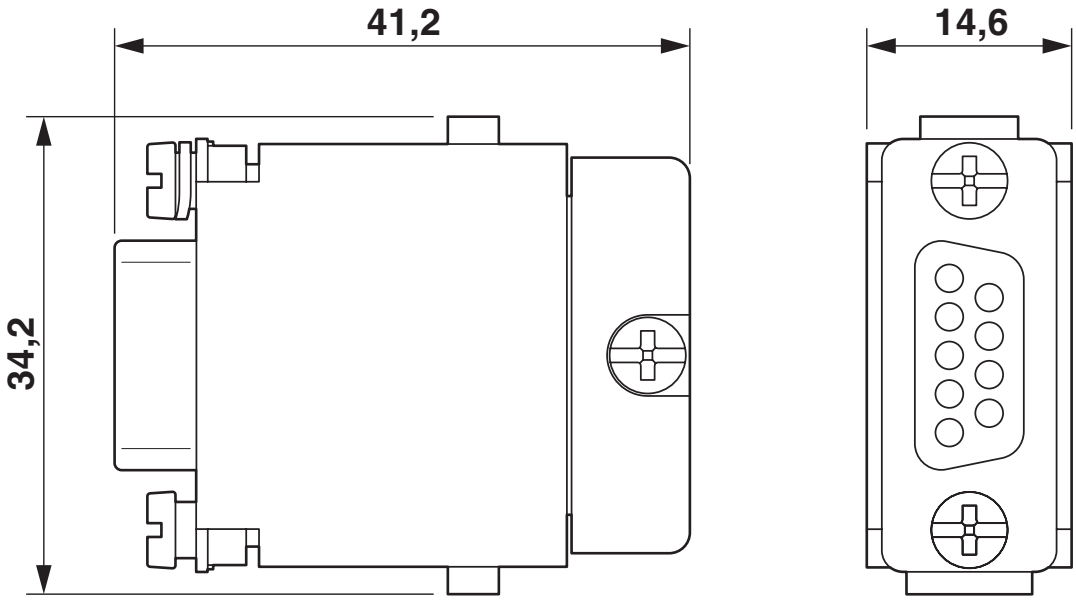

Dimensional drawing

Dimensional drawing

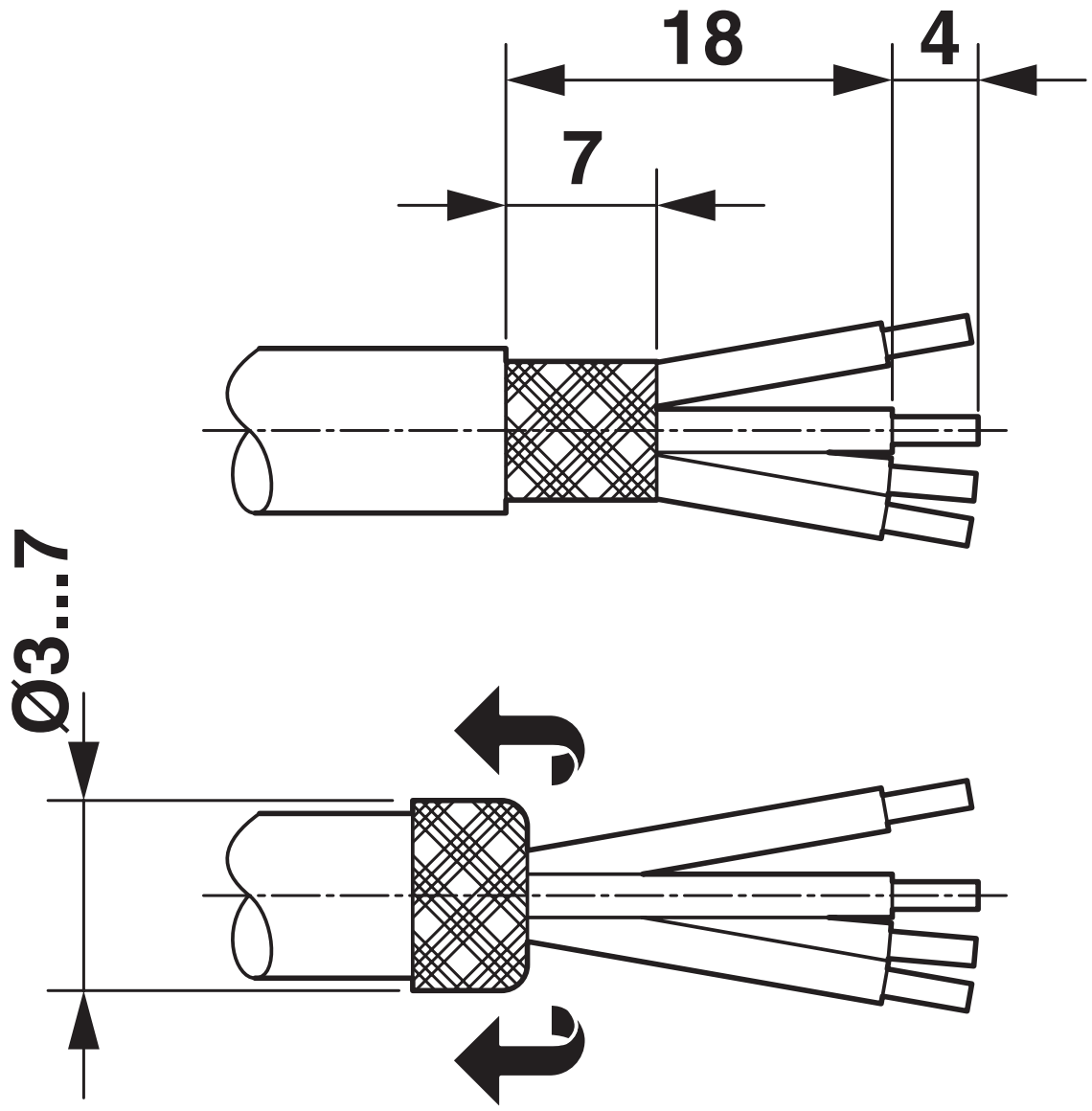

Stripping length specifications, pin assignment

Approvals

To download certificates, visit the product detail page: https://www.phoenixcontact.com/us/products/1079793

DNV
Approval ID: TAE000037S

EAC
Approval ID: RU C-DE.BL08.B.00511

Classifications

ECLASS

ECLASS-11.0	27440218
ECLASS-12.0	27440218
ECLASS-13.0	27440218

ETIM

ETIM 9.0	EC000438

UNSPSC

UNSPSC 21.0	39121400

Environmental product compliance

EU RoHS

Fulfills EU RoHS substance requirements	Yes, No exemptions

China RoHS

Environment friendly use period (EFUP)	EFUP-E
	No hazardous substances above the limits

EU REACH SVHC

REACH candidate substance (CAS No.)	No substance above 0.1 wt%

Accessories

HC-CBU-MOD - Coding element

1636130

https://www.phoenixcontact.com/us/products/1636130



Coding socket for coding up to 16 connectors, for HC Modular

HC-CST-MOD - Coding element

1636127

https://www.phoenixcontact.com/us/products/1636127



Coding peg for coding up to 16 connectors, for HC Modular

CUC-DSC-C1BAU-S/DSC28 - D-SUB crimp contact

1418784

https://www.phoenixcontact.com/us/products/1418784



D-SUB crimp contact, connection method: Crimp connection, connection cross section: AWG 28- 24

CUC-DSC-C1BAU-S/DSC24 - D-SUB crimp contact

1418786

https://www.phoenixcontact.com/us/products/1418786



D-SUB crimp contact, connection method: Crimp connection, connection cross section: AWG 24- 20

CUC-DSC-J1BAU-S/DSC28 - D-SUB crimp contact

1418787

https://www.phoenixcontact.com/us/products/1418787



D-SUB crimp contact, connection method: Crimp connection, connection cross section: AWG 28- 24

CUC-DSC-J1BAU-S/DSC24 - D-SUB crimp contact

1418788

https://www.phoenixcontact.com/us/products/1418788



D-SUB crimp contact, connection method: Crimp connection, connection cross section: AWG 24- 20

HC-M-B06-MFH-B - Module carrier frame

1182085

https://www.phoenixcontact.com/us/products/1182085



Module carrier frame, size: B6, type : for the panel mounting side (a, b, c, ...), 4 mm^2 ... 6 mm^2, application: Module carrier frame

HC-M-B10-MFH-B - Module carrier frame

1182088

https://www.phoenixcontact.com/us/products/1182088



Module carrier frame, size: B10, type : for the panel mounting side (a, b, c, ...), 4 mm^2 ... 6 mm^2, application: Module carrier frame

HC-M-B16-MFH-B - Module carrier frame

1182090

https://www.phoenixcontact.com/us/products/1182090



Module carrier frame, size: B16, type : for the panel mounting side (a, b, c, ...), 4 mm^2 ... 6 mm^2, application: Module carrier frame

HC-M-B24-MFH-B - Module carrier frame

1182094

https://www.phoenixcontact.com/us/products/1182094



Module carrier frame, size: B24, type : for the panel mounting side (a, b, c, ...), 4 mm^2 ... 6 mm^2, application: Module carrier frame

HC-M-B06-MFH-H - Module carrier frame

1182087

https://www.phoenixcontact.com/us/products/1182087



Module carrier frame, size: B6, type : for the sleeve side (A, B, C, ...), 4 mm^2 ... 6 mm^2, application: Module carrier frame

HC-M-B10-MFH-H - Module carrier frame

1182089

https://www.phoenixcontact.com/us/products/1182089



Module carrier frame, size: B10, type : for the sleeve side (A, B, C, ...), 4 mm^2 ... 6 mm^2, application: Module carrier frame

HC-M-B16-MFH-H - Module carrier frame

1182093

https://www.phoenixcontact.com/us/products/1182093

Module carrier frame, size: B16, type : for the sleeve side (A, B, C, ...), 4 mm^2 ... 6 mm^2, application: Module carrier frame



HC-M-B24-MFH-H - Module carrier frame

1182095

https://www.phoenixcontact.com/us/products/1182095

Module carrier frame, size: B24, type : for the sleeve side (A, B, C, ...), 4 mm^2 ... 6 mm^2, application: Module carrier frame



HC-M-DSUB-09/2-CT-F - Contact insert module

1079793

https://www.phoenixcontact.com/us/products/1079793

HC-M-DSUB-09/2-CT-M - Contact insert module

1079796

https://www.phoenixcontact.com/us/products/1079796



HEAVYCON pin contact insert module, D-SUB 9, crimp connection, for two conductors, without crimp contact

VS-IET-DSUB-SIGNAL-STD - Tool

1658794

https://www.phoenixcontact.com/us/products/1658794



Insertion/extraction tool, to insert and extract the D-SUB standard signal contacts

HC-M-DSUB-09/2-CT-F - Contact insert module

1079793

https://www.phoenixcontact.com/us/products/1079793

CRIMPFOX-TC MP - Crimping pliers with digital display

1212510

https://www.phoenixcontact.com/us/products/1212510



Crimping pliers, for turned contacts, universal cross section setting, up to a maximum of 2.5 mm^2, digital display with 0.01 mm increments, pressure lock can be unlocked, including positioning tool

Phoenix Contact 2024 © - all rights reserved
https://www.phoenixcontact.com

Phoenix Contact USA
586 Fulling Mill Road
Middletown, PA 17057, United States
(+717) 944-1300
info@phoenixcon.com