Data sheet

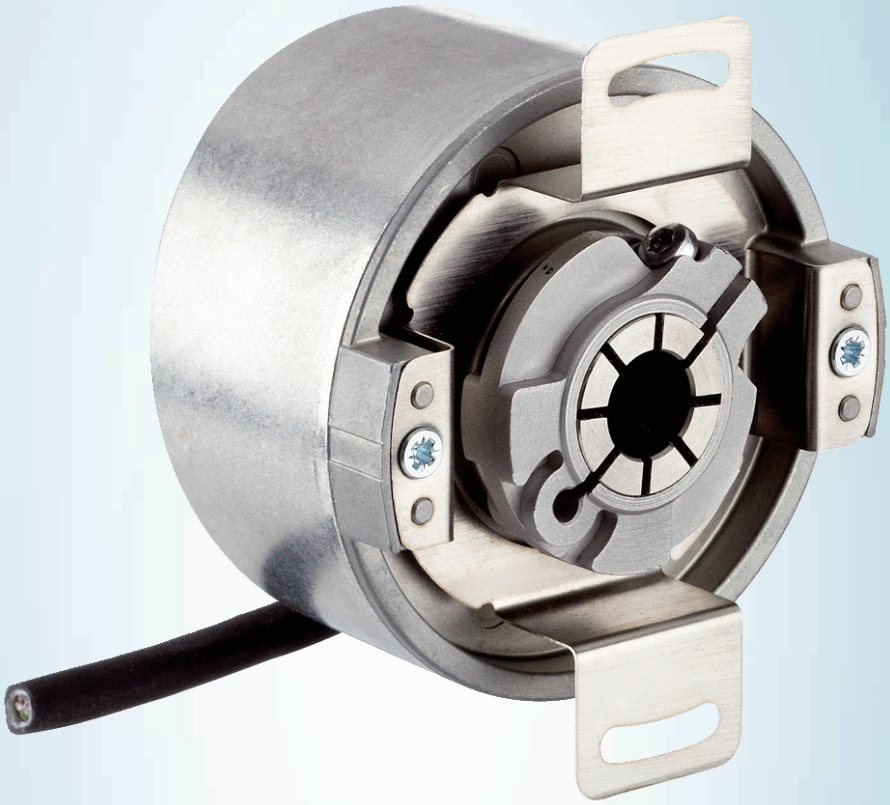

# DFS60B-BHEK01024

## DFS60

INCREMENTAL ENCODERS

SICK
Sensor Intelligence.



Illustration may differ

## Ordering information

| Type | part no. |
|---|---|
| DFS60B-BHEK01024 | 1050517 |

Other models and accessories ➜ www.sick.com/DFS60

## Detailed technical data

### Safety-related parameters

| | |
|---|---|
| **$MTTF_D$ (mean time to dangerous failure)** | 300 years (EN ISO 13849-1) [1] |

[1] This product is a standard product and does not constitute a safety component as defined in the Machinery Directive. Calculation based on nominal load of components, average ambient temperature 40 °C, frequency of use 8760 h/a. All electronic failures are considered hazardous. For more information, see document no. 8015532.

### Performance

| | |
|---|---|
| **Pulses per revolution** | 1,024 [1] |
| **Measuring step** | 90°, electric/pulses per revolution |
| **Measuring step deviation at binary number of lines** | ± 0.008° |
| **Error limits** | ± 0.05° |

[1] See maximum revolution range.

### Interfaces

| | |
|---|---|
| **Communication interface** | Incremental |
| **Communication Interface detail** | HTL / Push pull |
| **Number of signal channels** | 6-channel |
| **Initialization time** | 40 ms |
| **Output frequency** | ≤ 600 kHz |
| **Load current** | ≤ 30 mA |
| **Power consumption** | ≤ 0.5 W (without load) |

### Electronics

| | |
|---|---|
| **Connection type** | Cable, 8-wire, universal, 1.5 m [1] |
| **Supply voltage** | 10 ... 32 V |
| **Reference signal, number** | 1 |

[1] The universal cable connection is positioned so that it is possible to lay it without bends in a radial or axial direction.
[2] Short-circuit opposite to another channel, US or GND permissable for maximum 30 s.

| | |
|---|---|
| **Reference signal, position** | 90°, electric, logically gated with A and B |
| **Reverse polarity protection** | ✓ |
| **Short-circuit protection of the outputs** | ✓ [2] |

[1] The universal cable connection is positioned so that it is possible to lay it without bends in a radial or axial direction.
[2] Short-circuit opposite to another channel, US or GND permissable for maximum 30 s.

## Mechanics

| | |
|---|---|
| **Mechanical design** | Blind hollow shaft |
| **Shaft diameter** | 15 mm |
| **Weight** | + 0.2 kg |
| **Shaft material** | Stainless steel |
| **Flange material** | Aluminum |
| **Housing material** | Aluminum die cast |
| **Start up torque** | 0.8 Ncm (+20 °C) |
| **Operating torque** | 0.6 Ncm (+20 °C) |
| **Permissible movement static** | ± 0.3 mm (radial)<br>± 0.5 mm (axial) |
| **Permissible movement dynamic** | ± 0.1 mm (radial)<br>± 0.2 mm (axial) |
| **Operating speed** | ≤ 6,000 $min^{-1}$ [1] |
| **Moment of inertia of the rotor** | 40 $gcm^2$ |
| **Bearing lifetime** | 3.6 x 10^10 revolutions |
| **Angular acceleration** | ≤ 500,000 $rad/s^2$ |

[1] Allow for self-heating of 3.3 K per 1,000 rpm when designing the operating temperature range.

## Ambient data

| | |
|---|---|
| **EMC** | According to EN 61000-6-2 and EN 61000-6-4 |
| **Enclosure rating** | IP67, housing side, cable connection (IEC 60529)<br>IP65, shaft side (IEC 60529) |
| **Permissible relative humidity** | 90 % (Condensation not permitted) |
| **Operating temperature range** | –40 °C ... +100 °C [1]<br>–30 °C ... +100 °C [2] |
| **Storage temperature range** | –40 °C ... +100 °C, without package |
| **Resistance to shocks** | 70 g, 6 ms (EN 60068-2-27) |
| **Resistance to vibration** | 30 g, 10 Hz ... 2,000 Hz (EN 60068-2-6) |

[1] Stationary position of the cable.
[2] Flexible position of the cable.

## Certificates

| | |
|---|---|
| **EU declaration of conformity** | ✓ |
| **UK declaration of conformity** | ✓ |
| **ACMA declaration of conformity** | ✓ |
| **Moroccan declaration of conformity** | ✓ |
| **China-RoHS** | ✓ |
| **cULus certificate** | ✓ |

| | |
|---|---|
| **Information according to Art. 3 of Data Act (Regulation EU 2023/2854)** | ✓ |

## Classifications

| | |
|---|---|
| **ECLASS 5.0** | 27270501 |
| **ECLASS 5.1.4** | 27270501 |
| **ECLASS 6.0** | 27270590 |
| **ECLASS 6.2** | 27270590 |
| **ECLASS 7.0** | 27270501 |
| **ECLASS 8.0** | 27270501 |
| **ECLASS 8.1** | 27270501 |
| **ECLASS 9.0** | 27270501 |
| **ECLASS 10.0** | 27270501 |
| **ECLASS 11.0** | 27270501 |
| **ECLASS 12.0** | 27270501 |
| **ETIM 5.0** | EC001486 |
| **ETIM 6.0** | EC001486 |
| **ETIM 7.0** | EC001486 |
| **ETIM 8.0** | EC001486 |
| **UNSPSC 16.0901** | 41112113 |

## Dimensional drawing

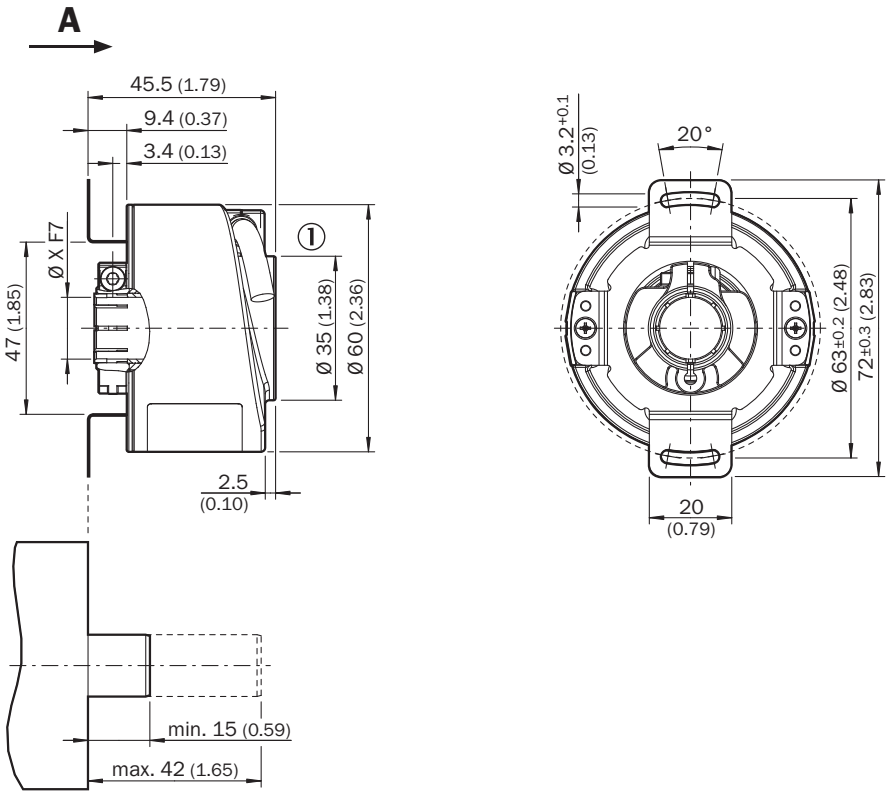

Dimensions in mm (inch)
① cable diameter = 5.6 mm +/- 0.2 mm bend radius = 30 mm

## PIN assignment

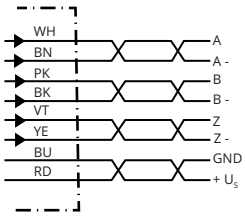


| PINMale connector M12, 8-pin | PINMale connector M23, 12-pin | Wire colors (cable connection) | TTL/HTL signal | Sin/Cos 1.0 $V_{PP}$ | Explanation |
|---|---|---|---|---|---|
| 1 | 6 | Brown | $\overline{A}$ | COS- | Signal wire |
| 2 | 5 | White | A | COS+ | Signal wire |
| 3 | 1 | Black | $\overline{B}$ | SIN- | Signal wire |
| 4 | 8 | Pink | B | SIN+ | Signal wire |
| 5 | 4 | Yellow | $\overline{Z}$ | $\overline{Z}$ | Signal wire |
| 6 | 3 | Purple | Z | Z | Signal wire |
| 7 | 10 | Blue | GND | GND | Ground connection |
| 8 | 12 | Red | $+U_S$ | $+U_S$ | Supply voltage |
| - | 9 | - | N.c. | N.c. | Not assigned |
| - | 2 | - | N.c. | N.c. | Not assigned |
| - | 11 | - | N.c. | N.c. | Not assigned |
| - | 7 [1)] | Orange | 0-SET [1)] | N.c. | Set zero pulse[1)] |
| Screen | Screen | Screen | Screen | Screen | Screen connected to housing on encoder side. Connected to ground on control side. |

[1)]For electrical interfaces only: M, U, V, W with 0-SET function on PIN 7 on M23 plug. The 0-SET input is used to set the zero pulse to the current shaft position. If the 0-SET input is applied to US for longer than 250 ms after it has previously been open or applied to GND for at least 1,000 ms, the current shaft position is assigned zero pulse signal “Z”.

## signal outputs

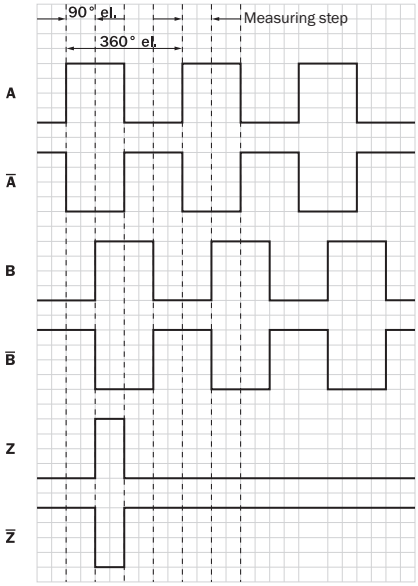


CW with view on the encoder shaft in direction “A”, compare dimensional drawing.

| Supply voltage | Output |
|---|---|
| 4,5 V ... 5,5 V | TTL |
| 10 V ... 32 V | TTL |
| 10 V ... 32 V | HTL |

## maximum revolution range

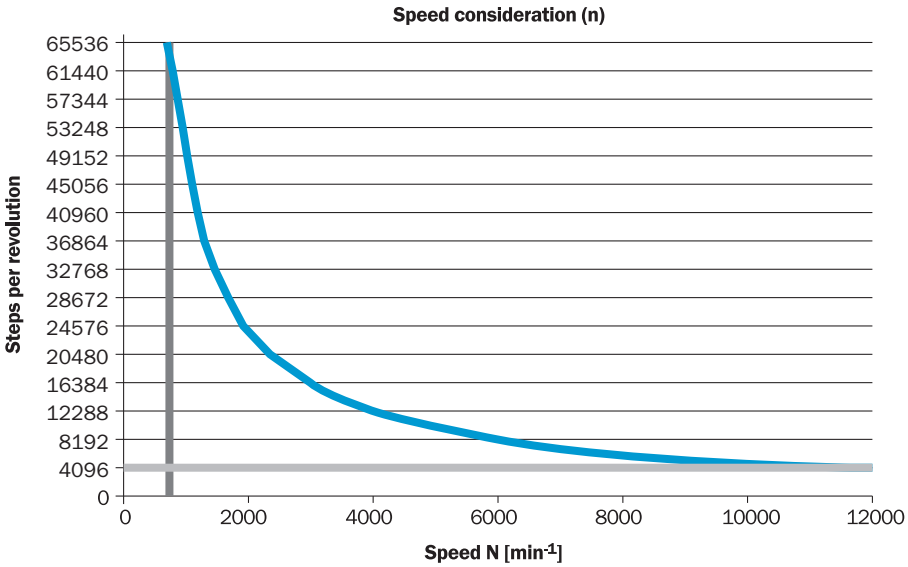

## Recommended accessories

Other models and accessories ➜ www.sick.com/DFS60

| | Brief description | Type | part no. |
|---|---|---|---|
| Mounting systems | | | |
|  | • **Product family:** Stator couplings<br>• **Description:** Standard stator coupling | BEF-DS00XFX | 2056812 |
|  | • **Description:** Clamping ring for metal hollow shaft<br>• **Material:** Steel<br>• **Details:** Metal | BEF-KR-M | 2064709 |

| | Brief description | Type | part no. |
|---|---|---|---|
| connectors and cables | | | |
|  | • **Connection type head A:** Male connector, M12, 8-pin, straight, A-coded<br>• **Signal type:** Incremental<br>• **Cable:** CAT5, CAT5e<br>• **Description:** Incremental, shielded<br>• **Connection systems:** IDC quick connection<br>• **Permitted cross-section:** 0.14 mm² ... 0.34 mm² | STE-1208-GA01 | 6044892 |
|  | • **Connection type head A:** Female connector, JST, 8-pin, straight<br>• **Connection type head B:** Flying leads<br>• **Signal type:** SSI, Incremental<br>• **Items supplied:** JST including sealing<br>• **Cable:** 3 m, 8-wire, PUR, halogen-free<br>• **Description:** SSI, shielded, Incremental | DOL-0J08-G3M0AA6 | 2048591 |
|  | • **Connection type head A:** Female connector, JST, 8-pin, straight<br>• **Connection type head B:** Flying leads<br>• **Signal type:** SSI, Incremental<br>• **Items supplied:** JST including sealing<br>• **Cable:** 1.5 m, 8-wire, PUR, halogen-free<br>• **Description:** SSI, shielded, Incremental | DOL-0J08-G1M5AA6 | 2048590 |
|  | • **Connection type head A:** Female connector, JST, 8-pin, straight<br>• **Connection type head B:** Flying leads<br>• **Signal type:** Incremental, SSI<br>• **Items supplied:** JST including sealing<br>• **Cable:** 0.5 m, 8-wire, PUR, halogen-free<br>• **Description:** Incremental, shielded, SSI | DOL-0J08-G0M5AA3 | 2046873 |
|  | • **Connection type head A:** Female connector, JST, 8-pin, straight<br>• **Connection type head B:** Flying leads<br>• **Signal type:** Incremental, SSI<br>• **Items supplied:** JST including sealing<br>• **Cable:** 5 m, 8-wire, PUR, halogen-free<br>• **Description:** Incremental, shielded, SSI | DOL-0J08-G05MAA3 | 2046876 |
|  | • **Connection type head A:** Female connector, JST, 8-pin, straight<br>• **Connection type head B:** Flying leads<br>• **Signal type:** Incremental, SSI<br>• **Items supplied:** JST including sealing<br>• **Cable:** 10 m, 8-wire, PUR, halogen-free<br>• **Description:** Incremental, shielded, SSI | DOL-0J08-G10MAA3 | 2046877 |
|  | • **Connection type head A:** Male connector, M23, 12-pin, straight, A-coded<br>• **Signal type:** HIPERFACE®, SSI, Incremental<br>• **Description:** HIPERFACE®, shieldedSSIIncremental<br>• **Connection systems:** Solder connection | STE-2312-GX | 6028548 |
|  | • **Connection type head A:** Male connector, M23, 12-pin, straight, A-coded<br>• **Signal type:** HIPERFACE®, SSI, Incremental<br>• **Description:** HIPERFACE®, shieldedSSIIncremental<br>• **Connection systems:** Solder connection | STE-2312-G01 | 2077273 |
|  | • **Connection type head A:** Female connector, JST, 8-pin, straight<br>• **Connection type head B:** Male connector, M23, 12-pin, straight<br>• **Signal type:** Incremental<br>• **Cable:** 0.35 m, 8-wire, PUR, halogen-free<br>• **Description:** Incremental, shielded | STL-2312-GM35AA3 | 2061621 |
|  | • **Connection type head A:** Female connector, JST, 8-pin, straight<br>• **Connection type head B:** Male connector, M23, 12-pin, straight<br>• **Signal type:** Incremental<br>• **Cable:** 1 m, 8-wire, PUR, halogen-free<br>• **Description:** Incremental, shielded | STL-2312-G01MAA3 | 2061622 |
|  | • **Connection type head A:** Female connector, JST, 8-pin, straight<br>• **Connection type head B:** Male connector, M23, 12-pin, straight<br>• **Signal type:** Incremental<br>• **Cable:** 2 m, 8-wire, PUR, halogen-free<br>• **Description:** Incremental, shielded | STL-2312-G02MAA3 | 2061504 |

# SICK AT A GLANCE

SICK is one of the leading manufacturers of intelligent sensors and sensor solutions for industrial applications. A unique range of products and services creates the perfect basis for controlling processes securely and efficiently, protecting individuals from accidents and preventing damage to the environment.

We have extensive experience in a wide range of industries and understand their processes and requirements. With intelligent sensors, we can deliver exactly what our customers need. In application centers in Europe, Asia and North America, system solutions are tested and optimized in accordance with customer specifications. All this makes us a reliable supplier and development partner.

Comprehensive services complete our offering: SICK LifeTime Services provide support throughout the machine life cycle and ensure safety and productivity.

**For us, that is “Sensor Intelligence.”**

# WORLDWIDE PRESENCE:

Contacts and other locations –www.sick.com