Jun.1.2024 Copyright 2024 HIROSE ELECTRIC CO., LTD. All Rights Reserved.
In case of consideration for using Automotive equipment / device which demand high reliability, kindly contact our sales window correspondents.

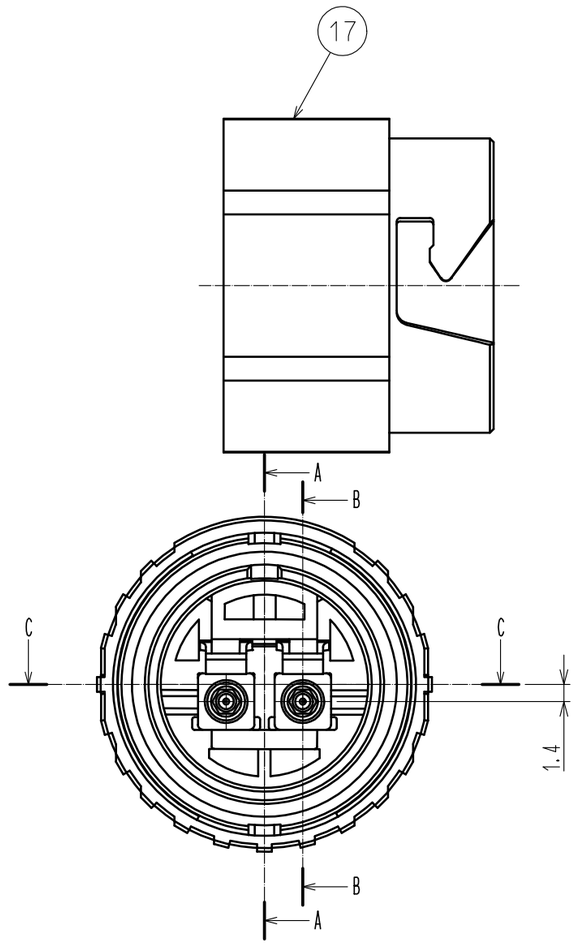

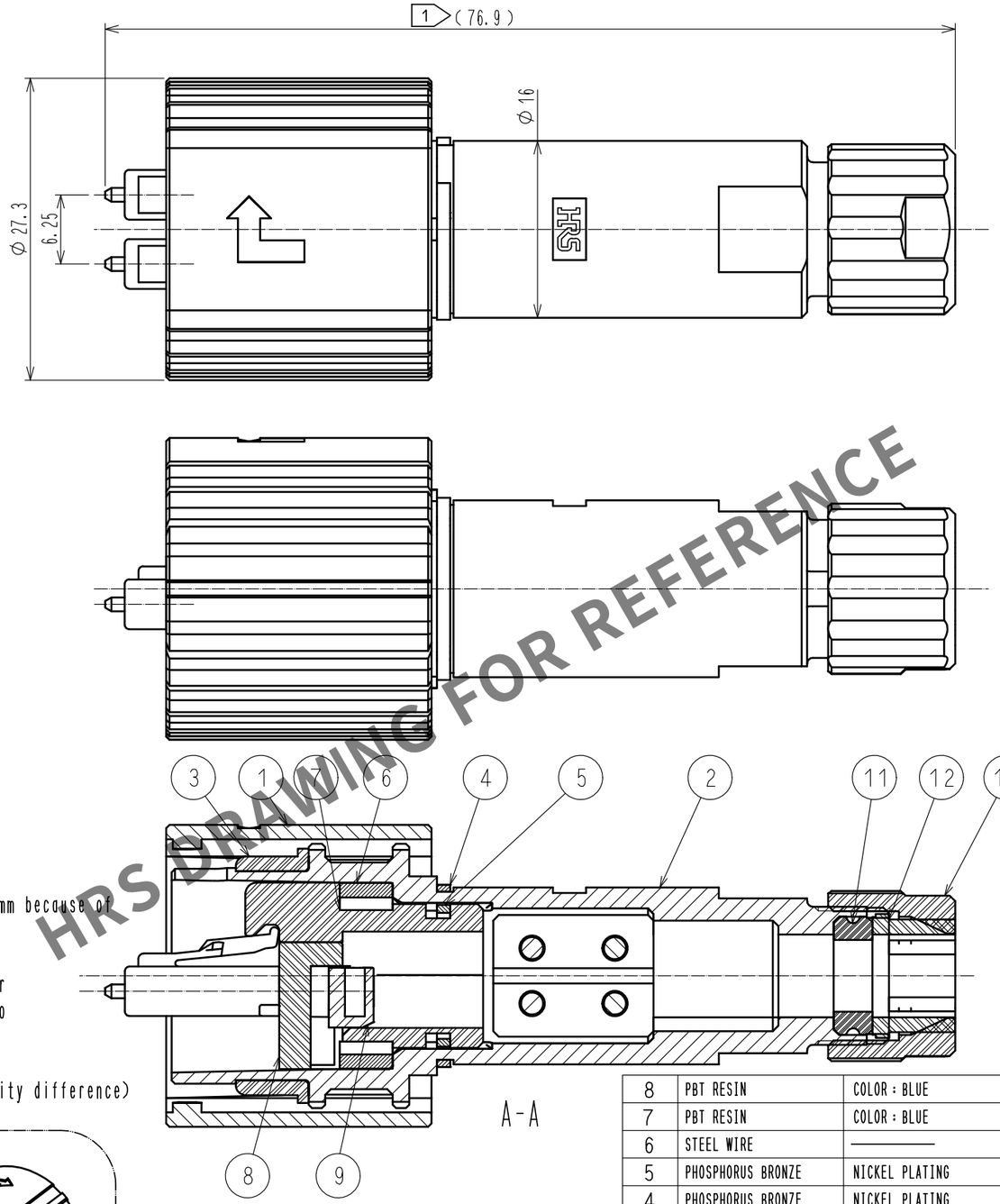

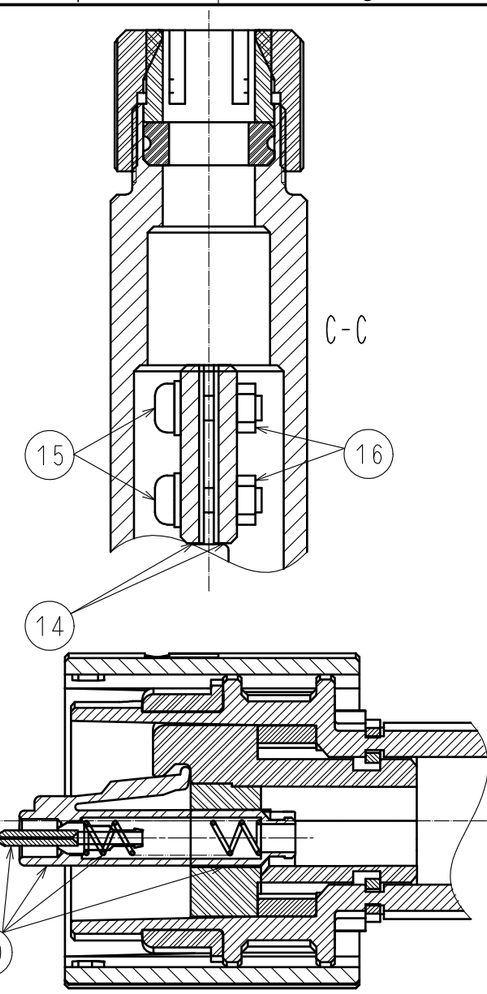

A-A

B-B

NOTE 1 This dimension can be changed from 76.9mm to 78.6mm because of floating structure of the connector.
2. Compliant with ROHS.
⚠1 3. We will change the resin material manufacturer for part number 6. 7 between 2019 and 2022 in order to continue the stable supply of this product.
Thank you for your understanding.
There is no change in product specification (quality difference) due to a change in material manufacturer.

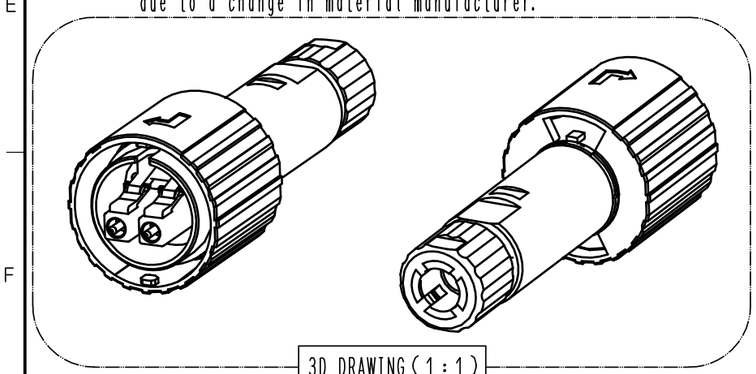

3D DRAWING (1 : 1)

HRS DRAWING FOR REFERENCE

NO.	MATERIAL	FINISH , REMARKS	NO.	MATERIAL	FINISH , REMARKS
8	PBT RESIN	COLOR : BLUE	17	POLYACETAL RESIN	COLOR : BLACK
7	PBT RESIN	COLOR : BLUE	16	STAINLESS STEEL	M2 HEXAGONAL NUT
6	STEEL WIRE	————	15	STAINLESS STEEL	M2 SCREW WITH SPRING WASHER
5	PHOSPHORUS BRONZE	NICKEL PLATING	14	ZINC ALLAY DIE CASTING	NICKEL PLATING
4	PHOSPHORUS BRONZE	NICKEL PLATING	13	PPS RESIN	COLOR : BLOWN
3	SILICON RUBBER	COLOR : BLACK	12	POLYAMIDE RESIN	COLOR : WHITE
2	ZINC ALLAY DIE CASTING	CHROME PLATING (COLOR : BLACK)	11	SILICON RUBBER	COLOR : FROSTED ⚠1
1	ZINC ALLAY DIE CASTING	CHROME PLATING (COLOR : BLACK)	10	ϕ0.9-LC PLUG KIT	FERRULE'S HOLE DIAMETER : ϕ0.1255
			9	PBT RESIN	COLOR : WHITE

UNITS	SCALE		COUNT	DESCRIPTION OF REVISIONS	DESIGNED	CHECKED	DATE
mm	2 : 1	⚠1	2	DIS-K-00003277	TY. SATO	SJ. SUZUKI	20210319

HIROSE ELECTRIC CO., LTD.

APPROVED	MT. SHIBUTANI	20130119
CHECKED	YH. MASUZAKI	20130118
DESIGNED	FS. YOSHIDA	20130118
DRAWN	FS. YOSHIDA	20130118

DRAWING NO.	EDC3-178497-00
PART NO.	SW20-LCPT75-3
CODE NO.	CL0717-5508-1-00 ⚠1 1/1