KUP-14AE5-24 ✔ ACTIVE

Potter & Brumfield | Potter & Brumfield KUP

TE Internal #: 6-1393117-8

General Purpose Power Relay, AC, Monostable, 3 Form C 3PDT-CO, 10 A Contact Rating, 24 VAC Coil Voltage, Potter & Brumfield KUP

View on TE.com >

Relays & Contactors > Electromechanical Relays



Relay & Contactor Type: **General Purpose Power Relay**

Coil Magnetic System: **Monostable**

Contact Arrangement: **3 Form C 3PDT-CO**

Current Type: **AC**

Contact Current Rating: **10 A**

Features

Product Type Features

Relay & Contactor Type	General Purpose Power Relay

Configuration Features

Contact Number of Poles	3
Coil Special Features	UL Coil Insulation Class B
Contact Arrangement	3 Form C 3PDT-CO

Electrical Characteristics

Contact Limiting Short-Time Current	10 A
Contact Limiting Making Current	10 A
Contact Limiting Continuous Current	10 A
Contact Limiting Breaking Current	10 A
Insulation Initial Dielectric Between Open Contacts	1200 Vrms
Insulation Initial Dielectric Between Adjacent Contacts	2200 Vrms
Contact Switching Load (Min)	300mA @ 12V
Coil Resistance	72 Ω
Coil Power Rating AC	2.8 VA
Insulation Initial Resistance	100 MΩ
Contact Current Rating	10 A
Coil Voltage Rating	24 VAC

Contact Voltage Rating	240 VAC
Insulation Initial Dielectric Between Contacts & Coil	2200 Vrms

Body Features

Product Weight	85 g[2.988 oz]
Enclosure Type	Dust Protected

Contact Features

Contact Material	Silver Cadmium Oxide

Termination Features

Main Termination & Connection Type	Quick Connect Terminals
Coil Termination & Connection Type	Quick Connect Terminals

Mechanical Attachment

Product Mount Type	Panel & Socket Mount

Dimensions

Product Width	35.71 mm[1.406 in]
Product Length	38.89 mm[1.53 in]
Product Height	49.2 mm[1.93 in]

Usage Conditions

Operating Temperature Range	-45 – 45 °C[-49 – 113 °F]
Environmental Category of Protection	RTI
Environmental Ambient Temperature (Max)	45 °C[113 °F]

Operation/Application

Coil Magnetic System	Monostable
Current Type	AC

Packaging Features

Packaging Method	Package

Other

	>2.5 – ≤3.5 VA
Contact Current Class	>5 – ≤10 A
Height Class (Mechanical)	>45 – ≤70 mm[>1.772 – ≤2.756 in]
Length Class (Mechanical)	>33 – ≤45 mm[>1.299 – ≤1.772 in]
Width Class (Mechanical)	>33 mm[>1.299 in]

Product Compliance

For compliance documentation, visit the product page on TE.com>

EU RoHS Directive 2011/65/EU	Compliant with Exemptions
EU ELV Directive 2000/53/EC	Not Yet Reviewed
China RoHS 2 Directive MIIT Order No 32, 2016	Restricted Materials Above Threshold
EU REACH Regulation (EC) No. 1907/2006	Current ECHA Candidate List: JUNE 2025 (250) Candidate List Declared Against: JUNE 2025 (250) SVHC > Threshold: Cadmium oxide (4.37% in 4735210816) **Article Safe Usage Statements:** Use personal protective equipment as required. Do not eat, drink or smoke when using this product. Recycle if possible and dispose of the article by following all applicable governmental regulations relevant to your geographic location.
Halogen Content	Not Low Halogen - contains Br or Cl > 900 ppm.
Solder Process Capability	Not applicable for solder process capability

Product Compliance Disclaimer

This information is provided based on reasonable inquiry of our suppliers and represents our current actual knowledge based on the information they provided. This information is subject to change. The part numbers that TE has identified as EU RoHS compliant have a maximum concentration of 0.1% by weight in homogenous materials for lead, hexavalent chromium, mercury, PBB, PBDE, DBP, BBP, DEHP, DIBP, and 0.01% for cadmium, or qualify for an exemption to these limits as defined in the Annexes of Directive 2011/65/EU (RoHS2). Finished electrical and electronic equipment products will be CE marked as required by Directive 2011/65/EU. Components may not be CE marked. Additionally, the part numbers that TE has identified as EU ELV compliant have a maximum concentration of 0.1% by weight in homogenous materials for lead, hexavalent chromium, and mercury, and 0.01% for cadmium, or qualify for an exemption to these limits as defined in the Annexes of Directive 2000/53/EC (ELV). Regarding the REACH Regulation, the information TE provides on SVHC in articles for this part number is based on the latest European Chemicals Agency (ECHA) 'Guidance on requirements for substances in articles' posted at this URL: https://echa.europa.eu/guidance-documents/guidance-on-reach

Compatible Parts



TE Part # 6-1393117-6
KUP-14AA5-24=KU

Also in the Series | Potter & Brumfield KUP

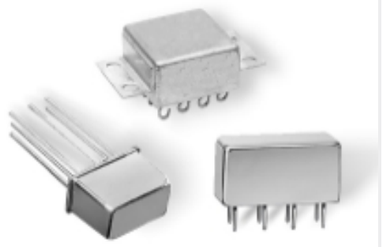

DC Relays(35)

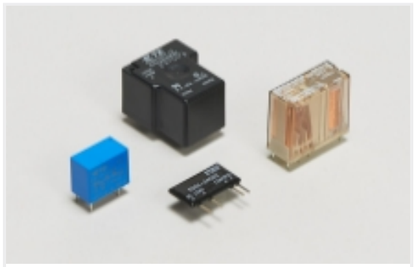

General Purpose Power Relays(66)



Relay Accessories(10)

Customers Also Bought



TE Part #UTRA4301S3NB-001
UHF PHANTOM,NMO,B FC 430-490 Mhz,



TE Part #204507-1
AMPLIMITE,ASY,PLUG,STD,90,4



TE Part #208492-1
PLUG ASSY,SZ 22,CMC



TE Part #213603-5
5015 PIN,18-14,TIN-LEAD,STRIP



TE Part #1-1393117-7
KUP-11A11-120=KU



TE Part #1-1393210-9
T9AS1D12-48



TE Part #2-1393238-5
RTB14615



TE Part #1-1393243-8
RTE24730



TE Part #1423695-4
W58-XC1A4A-16=CKTBKR,THERM,PB,

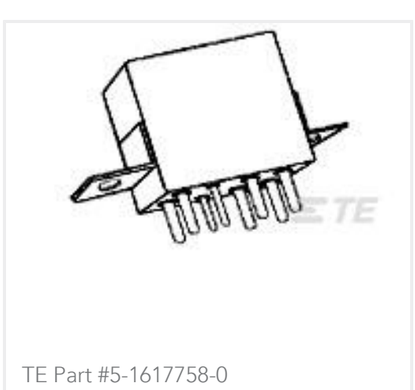

TE Part #5-1617758-0
FCB-205-0224M=M83536/2-024M

Documents

CAD Files

3D PDF

3D

Customer View Model

ENG_CVM_CVM_6-1393117-8_D.2d_dxf.zip

English

Customer View Model

ENG_CVM_CVM_6-1393117-8_D.3d_igs.zip

English

Customer View Model

ENG_CVM_CVM_6-1393117-8_D.3d_stp.zip

English

By downloading the CAD file I accept and agree to the Terms and Conditions of use.

Datasheets & Catalog Pages

KU Sockets & Accessories

English

KUP Series Panel Plug-in Relay

English

Product Specifications

Definitions General Purpose Relays

English

Agency Approvals

UL

English