TRIO-UPS-2G/3AC/24DC/20 - Uninterruptible power supply

2906367

https://www.phoenixcontact.com/us/products/2906367

Please be informed that the data shown in this PDF document is generated from our online catalog. Please find the complete data in the user documentation. Our general terms of use for downloads are valid.



TRIO UPS - UPS with integrated power supply, USB (Modbus/RTU), DIN rail mounting, Push-in connection, input: 3-phase, output: 24 V DC / 20 A

Product description

Supply DC loads reliably and save space with the TRIO uninterruptible power supplies. An input grid is no longer necessary for startup. Connected industrial PCs can be shut down easily via the integrated USB interface.

Your advantages

- Space saving: Combination of UPS module and power supply in the same housing
- Long buffer times, thanks to large selection of VRLA energy storage systems
- USB interface for connection to higher-level controllers such as industrial PCs
- Startup from energy storage possible, even without mains input
- Universal range of possible applications, thanks to a comprehensive package of approvals and an extended temperature range
- Easy installation, thanks to push-in connection technology

Commercial data

Item number	2906367
Packing unit	1 pc
Minimum order quantity	1 pc
Sales key	CM25
Product key	CMUO33
Catalog page	Page 355 (C-4-2019)
GTIN	4055626068053
Weight per piece (including packing)	2,081 g
Weight per piece (excluding packing)	1,733 g
Customs tariff number	85044095
Country of origin	CN

Technical data

Input data

Input voltage range	3x 400 V AC ... 500 V AC -20 % ... +15 %
	2x 400 V AC ... 500 V AC -10 % ... +10 %
Voltage type of supply voltage	AC
Inrush current	< 17.5 A
Inrush current integral (I^2t)	< 0.76 A^2s
Frequency range (f_N)	50 Hz ... 60 Hz (±10 %)
Mains buffering time	≥ 25 ms (400 V AC)
Switch-on time	typ. 200 ms
Typical current consumption	3x 1.3 A (400 V AC)
Input fuse	6.3 A (slow-blow, internal)

Signal Bat.-Start

Connection labeling	3.6
Signalization designation	Bat.-Start
Low signal	Connection to SGnd with < 2.7 kΩ
High signal	Open (> 200 kΩ between Bat.-Start and SGnd)

Signal Remote

Connection labeling	3.5
Signalization designation	Remote
Low signal	Connection to SGnd with < 2.7 kΩ
High signal	Open (> 35 kΩ between Remote and SGnd)

Output data

Efficiency	typ. 93 % (400 V AC)
	typ. 92 % (480 V AC)
	typ. 94 % (Battery operation)
Derating	> 60 °C (2.5%/K of P_{Out} nom.)
Crest factor	2.5 (400 V AC)
	2.6 (480 V AC)
Switch-over time	< 20 ms
UPS connection in parallel	yes, with diode module uncoupled
UPS connection in series	no
Energy storage device connection in parallel	yes
Feedback voltage resistance	≤ 35 V DC
Protection against overvoltage at the output (OVP)	< 30 V DC
Residual ripple	< 20 mV
Control deviation	< 0.3 % (change in load, static 10 % ... 90 %)
	< 5.9 % (Dynamic load change 10 % ... 90 %, 10 Hz)
	< 0.05 % (change in input voltage ±10 %)
Rise time	< 30 ms

Permissible backup fuse	B10

Mains operation

Output voltage	24 V DC
Output voltage range	24 V DC ... 28 V DC (> 24 V constant capacity)
Output current I_N	20 A
Dynamic Boost ($I_{Dyn.Boost}$)	30 A
Output power P_{OUT} (U_N, $I_{OUT} = I_N$)	480 W
Maximum no-load power dissipation	< 3.6 W (400 V AC)
Power loss nominal load max.	< 36 W (480 V AC)

Battery operation

Output voltage	U_{BAT} -0.1 V DC
Output voltage range	18 V DC ... 30 V DC
Output current I_N	20 A

Signal Alarm

Connection labeling	3.2
Signalization designation	Alarm
Type of signaling	LED red
Switching output	Transistor output, active
Output voltage	24 V DC
Continuous load current	20 mA
LED status indicator	red

Signal Battery mode

Connection labeling	3.3
Signalization designation	Battery mode
Type of signaling	Yellow LED
Switching output	Transistor output, active
Output voltage	24 V DC
Continuous load current	20 mA
LED status indicator	yellow

Signal DC OK

Connection labeling	3.1
Signalization designation	DC OK
Type of signaling	Green LED
Switching output	Transistor output, active
Output voltage	24 V DC
Continuous load current	20 mA
LED status indicator	green

Signal Ready

Connection labeling	3.4
Signalization designation	Ready
Switching output	Transistor output, active

Output voltage	24 V DC
Continuous load current	20 mA

Energy storage

Nominal voltage U_N	24 V DC
End-of-charge voltage	max. 30 V DC
Charging current (Configurable)	0.2 A ... 3 A (-25 °C ... 40 °C)
Charging current (Reduced)	3 A ... 0 A (40 °C ... 65 °C)
Charging current (Preset)	2.1 A (-25 °C ... 40 °C)
Charging current ()	3 A
Nominal capacity range	4 Ah ... 40 Ah
Battery technology	VRLA-AGM
Charge characteristic curve	IU_0U

Connection data

Input

Position	1.x

Conductor connection

Connection method	Push-in connection
rigid	0.2 mm² ... 4 mm²
flexible	0.2 mm² ... 2.5 mm²
flexible with ferrule without plastic sleeve	0.25 mm² ... 2.5 mm²
flexible with ferrule with plastic sleeve	0.25 mm² ... 1.5 mm²
rigid (AWG)	24 ... 12
Stripping length	10 mm

Output

Position	2.x

Conductor connection

Connection method	Push-in connection
rigid	0.2 mm² ... 10 mm²
flexible	0.2 mm² ... 6 mm²
flexible with ferrule without plastic sleeve	0.25 mm² ... 6 mm²
flexible with ferrule with plastic sleeve	0.25 mm² ... 4 mm²
rigid (AWG)	24 ... 8
Stripping length	15 mm

Signal

Position	3.x

Conductor connection

Connection method	Push-in connection
rigid	0.2 mm² ... 1.5 mm²
flexible	0.2 mm² ... 1.5 mm²

flexible with ferrule without plastic sleeve	0.2 mm² ... 1.5 mm²
flexible with ferrule with plastic sleeve	0.2 mm² ... 0.75 mm²
rigid (AWG)	24 ... 16
Stripping length	8 mm

Battery

Position	4.x

Conductor connection

Connection method	Push-in connection
rigid	0.2 mm² ... 10 mm²
flexible	0.2 mm² ... 6 mm²
flexible with ferrule without plastic sleeve	0.25 mm² ... 6 mm²
flexible with ferrule with plastic sleeve	0.25 mm² ... 4 mm²
rigid (AWG)	24 ... 8
Stripping length	15 mm

Interfaces

Interface	USB (Modbus/RTU)
Number of interfaces	1
Connection method	MINI-USB Type B
Locking	Screw

Electrical properties

Number of phases	3.00
Insulation voltage input/output	4 kV AC (type test)
	2 kV AC (routine test)
Insulation voltage output / PE	500 V AC
	500 V AC (routine test)
Insulation voltage input / PE	type test
	2 kV AC (routine test)

Product properties

Product type	DC UPS with integrated power supply
Product family	TRIO UPS
MTBF (IEC 61709, SN 29500)	> 1108720 h (400 V AC, at 25°C)
	> 680194 h (400 V AC, at 40°C)
	> 323816 h (400 V AC, at 60°C)

Insulation characteristics

Protection class	I
Degree of pollution	2

Life expectancy (electrolytic capacitors)

Current	20 A
Temperature	40 °C

Time	71552 h
Additional text	400 V AC

Dimensions

Item dimensions

Width	88 mm
Height	130 mm
Depth	160 mm

Item dimensions with alternative mounting

Width	160 mm
Height	130 mm
Depth	88 mm

Installation dimensions

Installation distance right/left	0 mm / 0 mm
Installation distance top/bottom	50 mm / 50 mm

Mounting

Mounting type	DIN rail mounting
Assembly note	alignable: horizontally 0 mm, vertically 50 mm
Mounting position	horizontal DIN rail NS 35, EN 60715

Material specifications

Flammability rating according to UL 94 (housing / terminal blocks)	V0
Housing material	Metal
Hood version	PC
Side element version	Aluminum

Environmental and real-life conditions

Ambient conditions

Degree of protection	IP20
Ambient temperature (operation)	-25 °C ... 70 °C (> 60 °C Derating: 2,5 %/K)
Ambient temperature (storage/transport)	-40 °C ... 85 °C
Ambient temperature (start-up type tested)	-40 °C
Maximum altitude	≤ 4000 m (> 2000 m, observe derating)
Climatic class	3K3 (in acc. with EN 60721)
Max. permissible relative humidity (operation)	≤ 95 % (At +25°C, non-condensing)
Shock	30g, 18 ms in accordance with IEC 60068-2-27
Vibration (operation)	< 12 ... 13.2 Hz, amplitude ±1 mm, 13.2 ... 100 Hz, 0.7g in accordance with IEC 60068-2-6

Standards and regulations

Overvoltage category

EN 61010-1	II

Safety for measurement, control, and laboratory equipment

Standard designation	Safety for equipment for measurement, control, and laboratory use
Standards/specifications	IEC 61010-1

Protective extra-low voltage

Standard designation	Protective extra-low voltage
Standards/specifications	IEC 61010 (SELV) / (PELV)

Safe isolation

Standard designation	Safe isolation
Standards/specifications	DIN VDE 0100-410

Low-voltage power supplies, DC output

Standard designation	Low-voltage power supplies, DC output
Standards/specifications	EN 61204-3

Ship’s bridge

Standard designation	Ship’s bridge
Standards/specifications	IEC/EN 60945

Approvals

UL

Identification	UL Listed UL 61010

UL

Identification	UL/C-UL Listed ANSI/ISA-12.12.01 Class I, Division 2, Groups A, B, C

Shipbuilding

Identification	DNV

Shipbuilding

Identification	LR

EMC data

Low Voltage Directive	Conformance with Low Voltage Directive 2014/35/EC
EMC requirements for noise emission	EN 61000-6-3
	EN 61000-6-4
EMC requirements for noise immunity	EN 61000-6-1
	EN 61000-6-2
Noise immunity	Immunity in accordance with EN 61000-6-2 (industrial)
Electromagnetic compatibility	Conformance with EMC Directive 2014/30/EU
Conducted noise emission	EN 61000-6-3
Noise emission	EN 61000-6-3
DNV GL conducted interference	Class B

Additional text	Area power distribution
DNV GL noise radiation	Class B
Additional text	Bridge and deck area

Harmonic currents

Standards/regulations	EN 61000-3-2

Flicker

Standards/regulations	EN 61000-3-3

Electrostatic discharge

Standards/regulations	EN 61000-4-2

Electrostatic discharge

Contact discharge	6 kV (Test Level 3)
Discharge in air	8 kV (Test Level 3)

Electromagnetic HF field

Standards/regulations	EN 61000-4-3

Electromagnetic HF field

Frequency range	80 MHz ... 6 GHz
Test field strength	10 V/m
Frequency range	1.4 GHz ... 6 GHz
Test field strength	3 V/m

Fast transients (burst)

Standards/regulations	EN 61000-4-4

Fast transients (burst)

Input	4 kV
Output	2 kV
Signal	2 kV

Surge voltage load (surge)

Standards/regulations	EN 61000-4-5

Surge voltage load (surge)

Input	1 kV (Test Level 3 - symmetrical)
	2 kV (Test Level 3 - asymmetrical)
Output	0.5 kV (Test Level 2 - symmetrical)
	1 kV (Test Level 2 - asymmetrical)
Signal	1 kV (Test Level 2 - asymmetrical)

Conducted interference

Standards/regulations	EN 61000-4-6

Conducted interference

Frequency range	0.15 MHz ... 80 MHz

Voltage	10 V

Attenuated sinusoidal oscillations (ring wave)

Standards/regulations	EN 61000-4-12
Input	2 kV (symmetrical)
	4 kV (asymmetrical)
Comments	Criterion A

Drawings

Schematic diagram

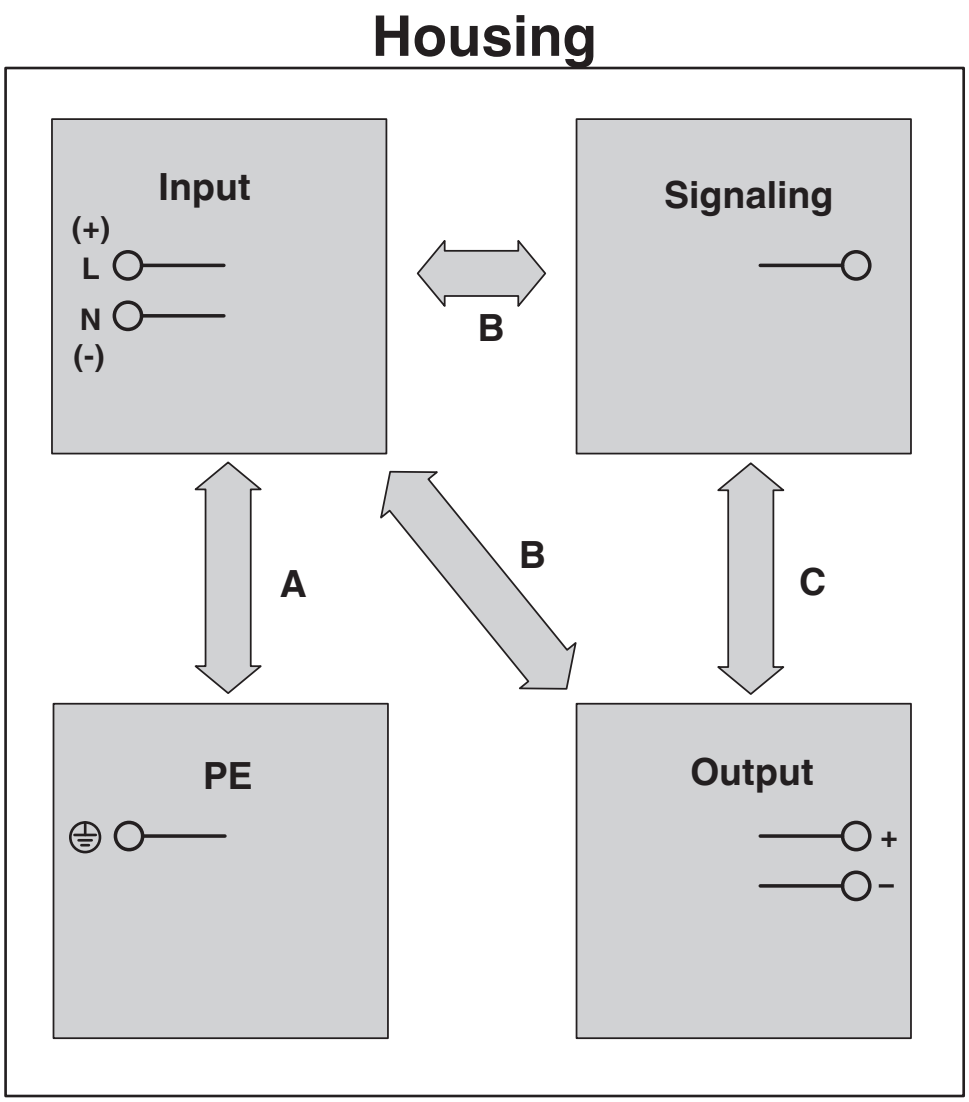

Insulation electric strength

TRIO-UPS-2G/3AC/24DC/20 - Uninterruptible power supply

2906367

https://www.phoenixcontact.com/us/products/2906367

Block diagram

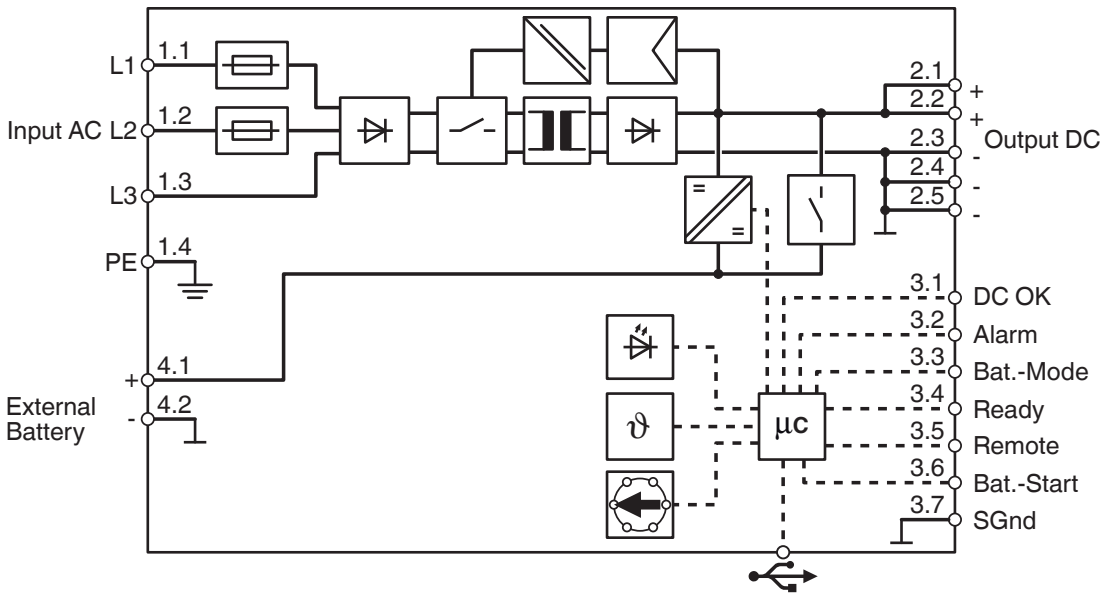

Block diagram

Approvals

To download certificates, visit the product detail page: https://www.phoenixcontact.com/us/products/2906367

DNV
Approval ID: TAA00002DW

IECEE CB Scheme
Approval ID: DK-69956-UL

EAC
Approval ID: RU S-DE.BL08.W.00764

LR
Approval ID: LR2002877TA

EAC
Approval ID: RU-DE.B.00184/20

UL Listed
Approval ID: FILE E 123528

cUL Listed
Approval ID: FILE E 123528

BSH
Approval ID: 1025a

KC
Approval ID: R-R-PCK-2906367

cUL Listed
Approval ID: FILE E 199827

UL Listed
Approval ID: FILE E 199827

cULus Listed

cULus Listed

Classifications

ECLASS

ECLASS-11.0	27040705
ECLASS-13.0	27040705
ECLASS-12.0	27040705

ETIM

ETIM 9.0	EC000382

UNSPSC

UNSPSC 21.0	39121000

Environmental product compliance

EU RoHS

Fulfills EU RoHS substance requirements	Yes
Exemption	6(c), 7(a), 7(c)-I, 7(c)-II

China RoHS

Environment friendly use period (EFUP)	EFUP-25
	An article-related China RoHS declaration table can be found in the download area for the respective article under "Manufacturer declaration". For all articles with EFUP-E, no China RoHS declaration table issued and required.

EU REACH SVHC

REACH candidate substance (CAS No.)	Lead(CAS: 7439-92-1)
SCIP	eb6ca739-9ca9-45a5-ba85-1c4906236287

Accessories

UPS-BAT/PB/24DC/4AH - Battery module

1274117

https://www.phoenixcontact.com/us/products/1274117



Battery module, VRLA-AGM, 24 V DC, 4 Ah, automatic detection and communication with QUINT UPS-IQ

UPS-BAT/PB/24DC/7AH - Battery module

1274118

https://www.phoenixcontact.com/us/products/1274118



Battery module, VRLA-AGM, 24 V DC, 7 Ah, automatic detection and communication with QUINT UPS-IQ

UPS-BAT/PB/24DC/12AH - Battery module

1274119

https://www.phoenixcontact.com/us/products/1274119



Battery module, VRLA-AGM, 24 V DC, 12 Ah, automatic detection and communication with QUINT UPS-IQ

UPS-BAT/PB/24DC/20AH - Battery module

1348516

https://www.phoenixcontact.com/us/products/1348516



Battery module, VRLA-AGM, 24 V DC, 20 Ah, automatic detection and communication with QUINT UPS-IQ

UPS-BAT/PB/24DC/40AH - Battery module

1354641

https://www.phoenixcontact.com/us/products/1354641



Battery module, VRLA-AGM, 24 V DC, 40 Ah, automatic detection and communication with QUINT UPS-IQ

UPS-BAT/VRLA-WTR/24DC/13AH - Battery module

2320416

https://www.phoenixcontact.com/us/products/2320416



Battery module, lead AGM, VRLA technology, 24 V DC, 13 Ah, tool-free battery replacement, automatic detection, and communication with QUINT UPS-IQ

UPS-BAT/VRLA-WTR/24DC/26AH - Battery module

2320429

https://www.phoenixcontact.com/us/products/2320429



Battery module, lead AGM, VRLA technology, 24 V DC, 26 Ah, tool-free battery replacement, automatic detection, and communication with QUINT UPS-IQ

MINI-SCREW-USB-DATACABLE - Data cable

2908217

https://www.phoenixcontact.com/us/products/2908217



Used for communication between an industrial PC and Phoenix Contact devices with USB-Mini-B connection.

UWA 130 - Mounting adapter

2901664

https://www.phoenixcontact.com/us/products/2901664



2-piece universal wall adapter for securely mounting the device in the event of strong vibrations. The profiles that are screwed onto the side of the device are screwed directly onto the mounting surface. The universal wall adapter is attached on the left/right.

UWA 182/52 - Mounting adapter

2938235

https://www.phoenixcontact.com/us/products/2938235



Universal wall adapter for securely mounting the device in the event of strong vibrations. The device is screwed directly onto the mounting surface. The universal wall adapter is attached on the top/bottom.

Phoenix Contact 2024 © - all rights reserved
https://www.phoenixcontact.com

Phoenix Contact USA
586 Fulling Mill Road
Middletown, PA 17057, United States
(+717) 944-1300
info@phoenixcon.com