MINI MCR-2-2I-2I-ILP-PT - Passive separator

2901997

https://www.phoenixcontact.com/us/products/2901997

Please be informed that the data shown in this PDF document is generated from our online catalog. Please find the complete data in the user documentation. Our general terms of use for downloads are valid.



2-channel input loop-powered 2-way isolator with plug-in connection technology for the electrical isolation of analog signals. Input signal = output signal: 0(4) mA ... 20 mA. Push-in connection technology.

Product description

Two-channel input-loop-powered 2-way isolator with plug-in connection technology for the electrical isolation and filtering of analog signals. The input-loop-powered isolator allows operation with active sensor technology with a supply voltage of 9.6 V DC ... 30 V DC. The device is powered via the current loop of the sensor. Input signal = output signal: 0(4) mA to 20 mA. The measuring transducer supports NFC communication.

Commercial data

Item number	2901997
Packing unit	1 pc
Minimum order quantity	1 pc
Sales key	C404
Product key	DK1121
GTIN	4046356649483
Weight per piece (including packing)	113.7 g
Weight per piece (excluding packing)	106.8 g
Customs tariff number	85437090
Country of origin	DE

Technical data

Notes

Utilization restriction

EMC note	EMC: class A product, see manufacturer's declaration in the download area

Product properties

Product type	Signal conditioner
Product family	MINI Analog Pro
No. of channels	2

Insulation characteristics: GB Standard

Overvoltage category	II
Pollution degree	2

Electrical properties

Electrical isolation	2-way isolation
Electrical isolation between input and output	yes
Limit frequency (3 dB)	100 Hz
Signal transmission behavior	In = Out
Maximum temperature coefficient	≤ 0.002 %/K (of measured value / 100 Ω load)
Maximum transmission error	≤ 0.1 % (of final value)
Additional error, load-dependent	< 0.075 % (of measured value / 100 Ω load)

Electrical isolation Input/output

Rated insulation voltage	300 V_{rms}
Test voltage	3 kV AC (50 Hz, 60 s)
Insulation	Reinforced insulation according to IEC/EN 61010-1

Supply

Supply voltage range	9.6 V DC ... 30 V DC (loop-powered, no external supply necessary)
Power consumption	600 mW

Input data

Signal: Current

Number of inputs	2
Configurable/programmable	no
Current input signal	0 mA ... 20 mA
	4 mA ... 20 mA
Response current	approx. 200 µA
Input voltage limitation	30 V
Voltage dissipation	3.1 V (I = 20 mA)

Output data

Signal: Current

Number of outputs	2
Configurable/programmable	no
Current output signal	0 mA ... 20 mA
	4 mA ... 20 mA
Load/output load current output	< 600 Ω (at I = 20 mA output signal)

Connection data

Connection method	Push-in connection
Stripping length	10 mm
Conductor cross-section rigid	0.2 mm² ... 2.5 mm² (with ferrule)
	0.14 mm² ... 2.5 mm² (without ferrule)
Conductor cross-section flexible	0.14 mm² ... 2.5 mm²
Conductor cross-section AWG	24 ... 12 (flexible)

Ex data

Ex installation (EPL)	Gc
	Div. 2

Dimensions

Width	6.2 mm
Height	109.81 mm
Depth	119.2 mm

Material specifications

Color	gray (RAL 7042)
Housing material	PBT
Fire protection for rail vehicles (DIN EN 45545-2) R22	HL 1 - HL 2
Fire protection for rail vehicles (DIN EN 45545-2) R23	HL 1 - HL 2
Fire protection for rail vehicles (DIN EN 45545-2) R24	HL 1 - HL 2

Environmental and real-life conditions

Ambient conditions

Degree of protection	IP20 (not assessed by UL)
Ambient temperature (operation)	-40 °C ... 70 °C
Ambient temperature (storage/transport)	-40 °C ... 85 °C
Permissible humidity (operation)	5 % ... 95 % (non-condensing)

Approvals

CE

Certificate	CE-compliant

ATEX

Identification	II 3 G Ex ec IIC T4 Gc
Certificate	BVS 19 ATEX E 079 X

IECEx

Identification	Ex ec IIC T4 Gc
Certificate	IECEx BVS 19.0068X

CCC / China-Ex

Identification	Ex ec IIC T4 Gc

UL, USA/Canada

Identification	UL 508 Listed
	Class I, Div. 2, Groups A, B, C, D T6
	Class I, Zone 2, Group IIC T6

EAC Ex

Identification	Ex ec IIC T4 Gc
Certificate	BY/112 02.01 TP012 103.01 00081

EMC data

Electromagnetic compatibility	Conformance with EMC directive
Noise immunity	EN 61000-6-2
Note	When being exposed to interference, there may be minimal deviations.

Noise emission

Standards/regulations	EN 61000-6-4

Standards and regulations

Electrical isolation	2-way isolation

GB Standard

Standards/regulations	GB/T 3836.1
	GB/T 3836.3

Mounting

Mounting type	DIN rail mounting
Mounting position	any

Drawings

Application drawing

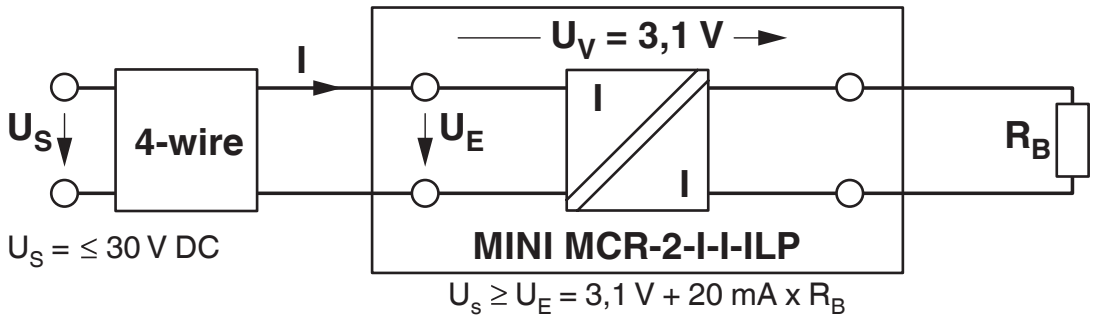

Block diagram

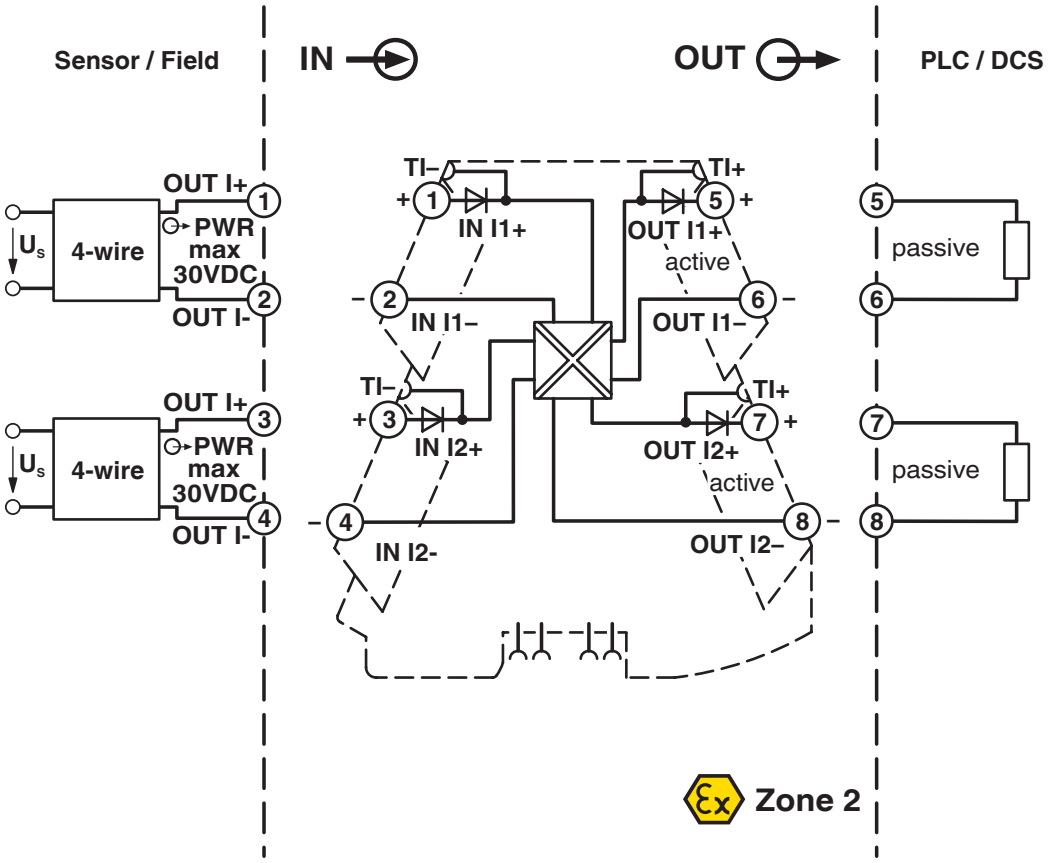

Approvals

To download certificates, visit the product detail page: https://www.phoenixcontact.com/us/products/2901997

EAC
Approval ID: RU*DE.*08.B.01608/19

UL Listed
Approval ID: E238705

cUL Listed
Approval ID: E238705

IECEx
Approval ID: IECEx BVS 19.0068X

cUL Listed
Approval ID: FILE E 196811

UL Listed
Approval ID: E196811

ATEX
Approval ID: BVS 19 ATEX E 079 X

EAC Ex
Approval ID: TR TS_S_103.01.00081

CCC
Approval ID: 2021122310114155

Classifications

ECLASS

ECLASS-13.0	27210120
ECLASS-15.0	27210120

ETIM

ETIM 9.0	EC002653

UNSPSC

UNSPSC 21.0	39121000

Environmental product compliance

EU RoHS

Fulfills EU RoHS substance requirements	Yes
Exemption	7(a), 7(c)-I

China RoHS

Environment friendly use period (EFUP)	EFUP-50
	An article-related China RoHS declaration table can be found in the download area for the respective article under "Manufacturer declaration". For all articles with EFUP-E, no China RoHS declaration table issued and required.

EU REACH SVHC

REACH candidate substance (CAS No.)	Lead(CAS: 7439-92-1)
SCIP	b9b64fc1-6304-4662-b523-606c2c982230

Phoenix Contact 2025 © - all rights reserved
https://www.phoenixcontact.com

Phoenix Contact USA
586 Fulling Mill Road
Middletown, PA 17057, United States
(+717) 944-1300
info@phoenixcon.com