Data sheet



BTF13-P1HM0525

HighLine

WIRE DRAW ENCODERS

SICK
Sensor Intelligence.

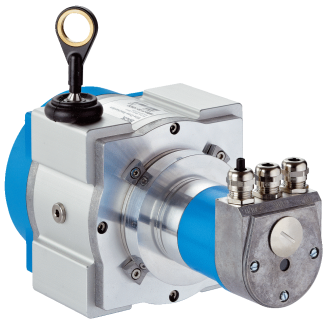

Ordering information

Type	part no.
BTF13-P1HM0525	1034306

Included in delivery: ATM60-P1H13X13 (1), MRA-F130-105D2 (1)

Other models and accessories → www.sick.com/HighLine

Detailed technical data

Safety-related parameters

$MTTF_D$ (mean time to dangerous failure)	150 years (EN ISO 13849-1) [1]

[1] This product is a standard product and does not constitute a safety component as defined in the Machinery Directive. Calculation based on nominal load of components, average ambient temperature 40 °C, frequency of use 8760 h/a. All electronic failures are considered hazardous. For more information, see document no. 8015532.

Performance

Measurement range	0 m ... 5 m
Encoder	Absolute encoders
Resolution (wire draw + encoder)	0.04 mm [1] [2]
Repeatability	≤ 1 mm [3]
Linearity	≤ ± 2 mm [3]
Hysteresis	≤ 2 mm [3]

[1] The values shown have been rounded.
[2] Example calculation based on the BTF08 with PROFINET: 200 mm (wire draw length per revolution - see Mechanical data): 262,144 (number of steps per revolution) = 0.001 mm (resolution of wire draw + encoder combination).
[3] Value applies to wire draw mechanism.

Interfaces

Communication interface	PROFIBUS DP
Programmable/configurable	✓

Electronics

Connection type	Bus adapter for PROFIBUS [1]
Supply voltage	10 V ... 32 V
Power consumption	≤ 2 W (without load)

[1] Order bus adapter separately.

Mechanics

Weight	3.39 kg
Measuring wire material	Highly flexible stranded steel 1,4401 stainless steel V4A
Measuring wire diameter	1.35 mm
Weight (measuring wire)	7.1 g/m
Housing material, wire draw mechanism	Aluminum (anodised), plastic
Spring return force	15 N ... 20 N [1]
Length of wire pulled out per revolution	334.1 mm
Life of wire draw mechanism	Typ. 1,000,000 cycles [2] [3]
Actual wire draw length	5.2 m
Wire acceleration	70 m/s²
Operating speed	8 m/s
Mounted encoder	ATM60 PROFIBUS, ATM60-P1H13X13, 1030014
Mounted mechanic	MRA-F130-105D2, 6028626

[1] These values were measred at an ambient temperature of 25 °C. There may be variations at other temperatures.
[2] Average values, which depend on the application.
[3] The service life depends on the type of load. This is influenced by environmental conditions, the installation location, the measuring range in use, the traversing speed, and acceleration.

Ambient data

EMC	According to EN 61000-6-2 and EN 61000-6-3
Enclosure rating	IP64, mounted mechanic
Operating temperature range	–20 °C ... +70 °C

Certificates

EU declaration of conformity	✓
UK declaration of conformity	✓
ACMA declaration of conformity	✓
Moroccan declaration of conformity	✓
China-RoHS	✓

Classifications

ECLASS 5.0	27270590
ECLASS 5.1.4	27270590
ECLASS 6.0	27270590
ECLASS 6.2	27270590
ECLASS 7.0	27270590
ECLASS 8.0	27270590
ECLASS 8.1	27270590
ECLASS 9.0	27270590
ECLASS 10.0	27270613
ECLASS 11.0	27270503
ECLASS 12.0	27270503
ETIM 5.0	EC001486

ETIM 6.0	EC001486
ETIM 7.0	EC001486
ETIM 8.0	EC001486
UNSPSC 16.0901	41112113

Dimensional drawing

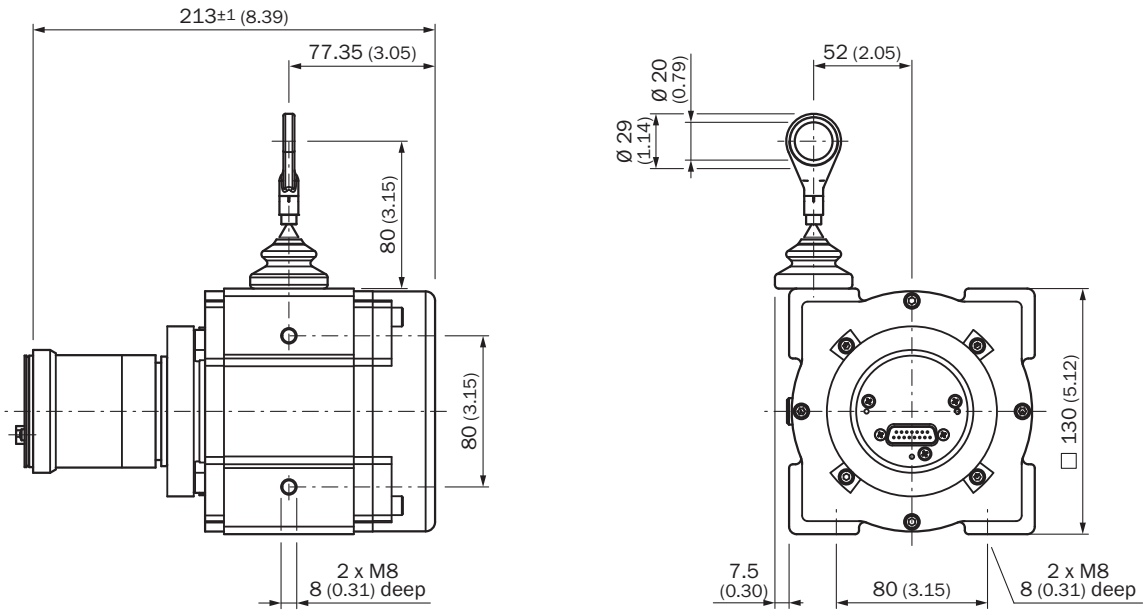

Dimensions in mm (inch)

PIN assignment

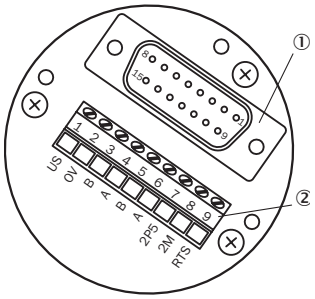

① Internal plug connector to encoder
② external connection to the bus

Encoders with a PROFIBUS connection adapter have screw connections (metric/PG) for connecting the bus and supply cables. The bus adapter from the complete device is screwed on to connect the cables. The adjacent figure shows the pin assignment within the bus adapter.

Terminal strip	Connector 4-pin	Connector 5-pin	Female connector 5 pin	Signal	Explanation
1	1	-	-	U_S (24 V)	Operating voltage 10 ... 32 V
2	3	-	-	0 V (GND)	Ground (0 V)

Encoders with a PROFIBUS connection adapter have screw connections (metric/PG) for connecting the bus and supply cables. The bus adapter from the complete device is screwed on to connect the cables. The adjacent figure shows the pin assignment within the bus adapter.					
3	-	-	4	B	B-cable PROFIBUS DP (out)
4	-	-	2	A	A-cable PROFIBUS DP (out)
5	-	4	-	B	B-cable PROFIBUS DP (out)
6	-	2	-	A	A-cable PROFIBUS DP (out)
7	-	-	1	2P5[1)]	+ 5 V (potential free)
8	-	-	3	2M[1)]	0 V (potential free)
-	2	1	-	N.C.	-
-	4	3	-	N.C.	-
-	-	5	5	Screen	Housing potential
[1)]Use for external bus terminations or to supply the sender/receiver with a optical fiber transmission					

Recommended accessories

Other models and accessories ➜ www.sick.com/HighLine

	Brief description	Type	part no.
Mounting systems			
	• **Description:** Joint ball for later insertion in wire end ring with 20 mm diameter. The use of this joint ball enables movement in multiple levels of freedom.	Joint protection for wire rope BTF/PRF/MRA	5318683
	• **Description:** Compressed air attachment for MRA-F080... and MRA-F130... HighLine wire draw mechanism	MRA-F-P	6073769
	• **Description:** Flange adapter for HighLine wire draw mechanisms, adaption of face mount flange with centering hub 20 mm to 50 mm servo flange • **Material:** Aluminum • **Details:** Aluminum • **Items supplied:** Including 3 countersunk screws M3 x 10	BEF-FA-020-050WDE	2073776
	• **Description:** Additional brush attachment for wire draw mechanism MRA-F130 (5 m, 10 m, 20 m and 30 m from HighLine series)	MRA-F130-B	6038562
	• **Description:** Wire draw deflection pulley for wire draw mechanism MRA-F130 (5m, 10m, 20m and 30m from HighLine series)	MRA-F130-R	6028631

	Brief description	Type	part no.
connectors and cables			
	• **Connection type head A:** Female connector, M12, 4-pin, straight, A-coded • **Description:** Unshielded • **Connection systems:** Screw-type terminals • **Permitted cross-section:** ≤ 0.75 mm²	DOS-1204-G	6007302
	• **Connection type head A:** Flying leads • **Connection type head B:** Flying leads • **Signal type:** PROFIBUS DP • **Items supplied:** By the meter • **Cable:** 2-wire, PUR • **Description:** PROFIBUS DP, shielded	LTG-2102-MW	6021355
	• **Connection type head A:** Male connector, M12, 5-pin, straight, B-coded • **Signal type:** PROFIBUS DP • **Description:** PROFIBUS DP, shielded • **Connection systems:** Screw-type terminals • **Permitted cross-section:** ≤ 0.75 mm²	STE-1205-GQ	6021354
	• **Connection type head A:** Female connector, M12, 5-pin, straight, B-coded • **Signal type:** PROFIBUS DP • **Description:** PROFIBUS DP, shielded • **Connection systems:** Screw-type terminals • **Permitted cross-section:** ≤ 0.75 mm²	DOS-1205-GQ	6021353
	• **Connection type head A:** Female connector, M12, 5-pin, straight, B-coded • **Connection type head B:** Flying leads • **Signal type:** Fieldbus, PROFIBUS DP • **Cable:** 12 m, 2-wire, PUR, halogen-free • **Description:** Fieldbus, twisted pair, shieldedPROFIBUS DP • **Connection systems:** Flying leads • **Application:** Zones with oils and lubricants	DOL-1205-G12MQ	6032636
	• **Connection type head A:** Female connector, M12, 4-pin, straight, A-coded • **Connection type head B:** Flying leads • **Signal type:** Sensor/actuator cable • **Cable:** 5 m, 4-wire, PVC • **Description:** Sensor/actuator cable, unshielded • **Application:** Zones with chemicals, Uncontaminated zones	YF2A14-050VB3XLEAX	2096235
	• **Connection type head A:** Male connector, M12, 2-pin, straight, B-coded • **Connection type head B:** Flying leads • **Signal type:** Fieldbus, PROFIBUS DP • **Cable:** 15 m, 2-wire, PUR, halogen-free • **Description:** Fieldbus, shieldedPROFIBUS DP • **Application:** Drag chain operation, Zones with oils and lubricants	YM2B22-150P-B1XLEAX	2106276
	• **Connection type head A:** Male connector, M12, 2-pin, straight, B-coded • **Connection type head B:** Flying leads • **Signal type:** Fieldbus, PROFIBUS DP • **Cable:** 5 m, 2-wire, PUR, halogen-free • **Description:** Fieldbus, shieldedPROFIBUS DP • **Application:** Drag chain operation, Zones with oils and lubricants	YM2B22-050P-B1XLEAX	2106270
	• **Connection type head A:** Male connector, M12, 2-pin, straight, B-coded • **Connection type head B:** Flying leads • **Signal type:** Fieldbus, PROFIBUS DP • **Cable:** 10 m, 2-wire, PUR, halogen-free • **Description:** Fieldbus, shieldedPROFIBUS DP • **Application:** Drag chain operation, Zones with oils and lubricants	YM2B22-100P-B1XLEAX	2106271
	• **Connection type head A:** Female connector, M12, 2-pin, straight, B-coded • **Connection type head B:** Flying leads • **Signal type:** Fieldbus, PROFIBUS DP • **Cable:** 10 m, 2-wire, PUR, halogen-free • **Description:** Fieldbus, shieldedPROFIBUS DP • **Application:** Drag chain operation, Zones with oils and lubricants	YF2B22-100P-B1XLEAX	2106269
	• **Connection type head A:** Female connector, M12, 2-pin, straight, B-coded • **Connection type head B:** Flying leads • **Signal type:** Fieldbus, PROFIBUS DP • **Cable:** 15 m, 2-wire, PUR, halogen-free • **Description:** Fieldbus, shieldedPROFIBUS DP • **Application:** Drag chain operation, Zones with oils and lubricants	YF2B22-150P-B1XLEAX	2106272
	• **Connection type head A:** Female connector, M12, 2-pin, straight, B-coded • **Connection type head B:** Flying leads • **Signal type:** Fieldbus, PROFIBUS DP	YF2B22-200P-B1XLEAX	2106273

	Brief description	Type	part no.
	• **Cable:** 20 m, 2-wire, PUR, halogen-free • **Description:** Fieldbus, shieldedPROFIBUS DP • **Application:** Drag chain operation, Zones with oils and lubricants		
	• **Connection type head A:** Female connector, M12, 2-pin, straight, B-coded • **Connection type head B:** Flying leads • **Signal type:** Fieldbus, PROFIBUS DP • **Cable:** 5 m, 2-wire, PUR, halogen-free • **Description:** Fieldbus, shieldedPROFIBUS DP • **Application:** Drag chain operation, Zones with oils and lubricants	YF2B22-050P-B1XLEAX	2121936
integration modules and adapters			
		AD-ATM60-KA3PR	2029225
		AD-ATM60-SR3PR	2031985
Wire draw mechanism			
	• **Product segment:** Wire draw mechanism • **Product family:** Wire draw mechanism for wire draw encoders • **Description:** HighLine wire draw mechanism for servo flange with 6 mm shaft, measuring range 0 m ... 5 m • **Items supplied:** Without encoder	MRA-F130-105D2	6028626

SICK AT A GLANCE

SICK is one of the leading manufacturers of intelligent sensors and sensor solutions for industrial applications. A unique range of products and services creates the perfect basis for controlling processes securely and efficiently, protecting individuals from accidents and preventing damage to the environment.

We have extensive experience in a wide range of industries and understand their processes and requirements. With intelligent sensors, we can deliver exactly what our customers need. In application centers in Europe, Asia and North America, system solutions are tested and optimized in accordance with customer specifications. All this makes us a reliable supplier and development partner.

Comprehensive services complete our offering: SICK LifeTime Services provide support throughout the machine life cycle and ensure safety and productivity.

For us, that is “Sensor Intelligence.”

WORLDWIDE PRESENCE:

Contacts and other locations –www.sick.com