EMG 10-REL/KSR-G 24/21-LCU - Relay module

2940359

https://www.phoenixcontact.com/us/products/2940359

Please be informed that the data shown in this PDF document is generated from our online catalog. Please find the complete data in the user documentation. Our general terms of use for downloads are valid.



Relay module, with soldered-in miniature switching relay, contact (AgNi): medium to large loads, 1 changeover contact, input voltage 24 V DC, design rotated 180°

Your advantages

- Integrated input circuit and interference suppression circuit

Commercial data

Item number	2940359
Packing unit	10 pc
Minimum order quantity	1 pc
Sales key	C460
Product key	DK61C2
GTIN	4017918080051
Weight per piece (including packing)	40.3 g
Weight per piece (excluding packing)	40.181 g
Customs tariff number	85364190
Country of origin	DE

Technical data

Notes

Utilization restriction

EMC note	EMC: class A product, see manufacturer's declaration in the download area

Product properties

Product type	Relay Module
Product family	EMG
Application	Universal
Operating mode	100% operating factor
Mechanical service life	approx. 2x 10^7 cycles

Insulation characteristics

Insulation	Basic insulation
Overvoltage category	III
Pollution degree	2

Data management status

Date of last data management	11.08.2025

Electrical properties

Maximum power dissipation for nominal condition	0.5 W
Test voltage (Winding/contact)	4 kV AC (50 Hz, 1 min., winding/contact)

Input data

Coil side

Nominal input voltage U_N	24 V DC
Input voltage range	19.2 V DC ... 26.4 V DC (20 °C)
Drive and function	monostable
Drive (polarity)	polarized
Typical input current at U_N	21 mA
Typical response time	7 ms
Typical release time	11 ms
Protective circuit	Reverse polarity protection; Polarity protection diode
	Freewheeling diode; Freewheeling diode
Operating voltage display	Yellow LED

Output data

Switching

Contact switching type	1 changeover contact
Type of switch contact	Double contact

Contact material	AgNi
Maximum switching voltage	250 V AC/DC
Limiting continuous current	6 A
Maximum inrush current	8 A
Interrupting rating (ohmic load) max.	140 W (at 24 V DC)
	53 W (at 48 V DC)
	45 W (at 60 V DC)
	35 W (at 110 V DC)
	55 W (at 220 V DC)
	1500 VA (for 250 V AC)

Connection data

Coil side

Connection method	Screw connection
Stripping length	8 mm
Screw thread	M3
Conductor cross-section rigid	0.2 mm² ... 4 mm²
Conductor cross-section flexible	0.2 mm² ... 2.5 mm²
Conductor cross-section AWG	24 ... 12

Contact side

Connection method	Screw connection
Stripping length	8 mm
Screw thread	M3
Conductor cross-section rigid	0.2 mm² ... 4 mm²
Conductor cross-section flexible	0.2 mm² ... 2.5 mm²
Conductor cross-section AWG	24 ... 12

Dimensions

Width	10.6 mm
Height	75 mm
Depth	62.5 mm

Material specifications

Color	green (RAL 6021)

Environmental and real-life conditions

Ambient conditions

Ambient temperature (operation)	-20 °C ... 40 °C
Ambient temperature (storage/transport)	-20 °C ... 70 °C

Standards and regulations

Standards/regulations	IEC 60664
	EN 50178

Mounting

Mounting type	DIN rail mounting
Assembly note	in rows with zero spacing
Mounting position	any

Drawings

Connection diagram

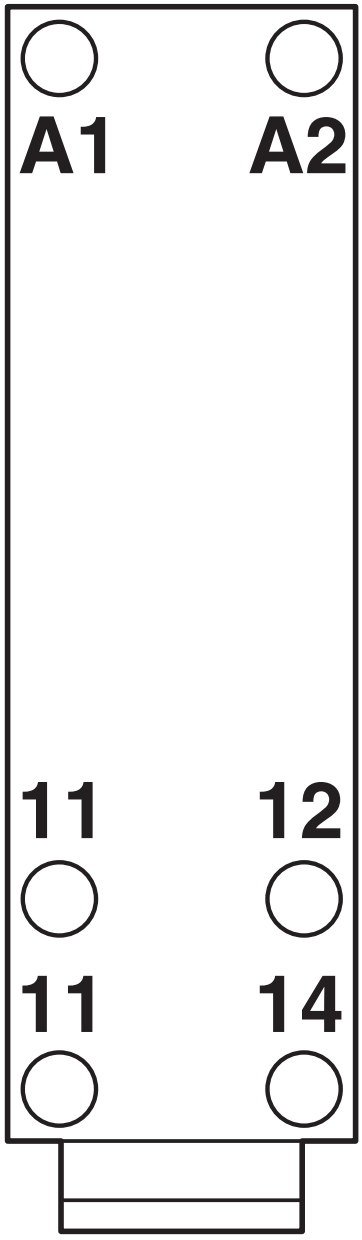

Circuit diagram

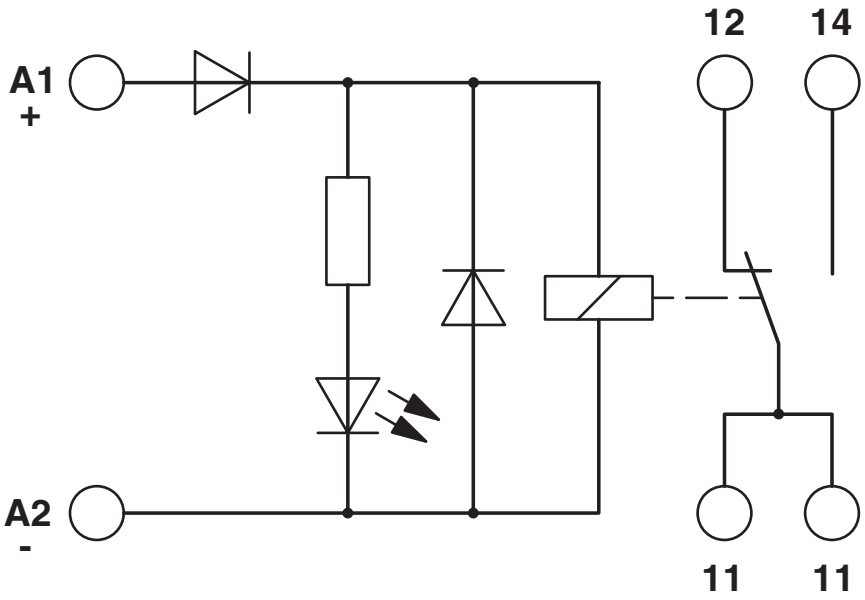

Circuit diagram

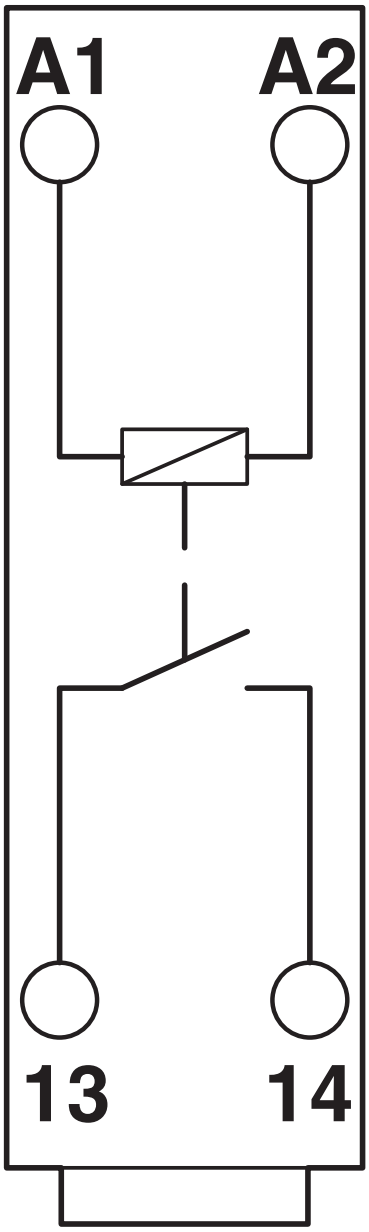

Approvals

To download certificates, visit the product detail page: https://www.phoenixcontact.com/us/products/2940359

cUL Recognized
Approval ID: E238705

UL Recognized
Approval ID: E238705

EAC
Approval ID: RU*C-DE.*08.B.00010

Classifications

ECLASS

ECLASS-13.0	27371601
ECLASS-15.0	27371601

ETIM

ETIM 9.0	EC001437

UNSPSC

UNSPSC 21.0	39122300

Environmental product compliance

EU RoHS

Fulfills EU RoHS substance requirements	Yes
Exemption	6(c), 7(a), 7(c)-I

China RoHS

Environment friendly use period (EFUP)	EFUP-50
	An article-related China RoHS declaration table can be found in the download area for the respective article under "Manufacturer declaration". For all articles with EFUP-E, no China RoHS declaration table issued and required.

EU REACH SVHC

REACH candidate substance (CAS No.)	Lead(CAS: 7439-92-1)
SCIP	94a4eee4-d971-4cf1-a444-30e2184e72ce

Phoenix Contact 2025 © - all rights reserved
https://www.phoenixcontact.com

Phoenix Contact USA
586 Fulling Mill Road
Middletown, PA 17057, United States
(+717) 944-1300
info@phoenixcon.com