MODEL: PJ-034-SMT-TR | DESCRIPTION: DC POWER JACK

FEATURES

- 0.65 mm center pin
- 1.0 A rating
- right angle orientation
- surface mount (SMT)
- internal switch

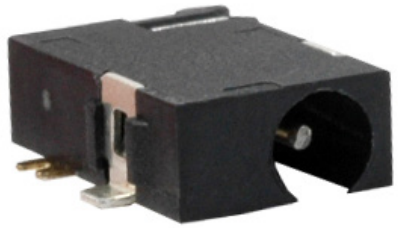

RoHS

SPECIFICATIONS

parameter	conditions/description	min	typ	max	units
rated input voltage			24		Vdc
rated input current				1.0	A
contact resistance				50	mΩ
insulation resistance	at 500 Vdc	100			MΩ
voltage withstand	for 1 minute			500	Vac
insertion/withdrawal force		0.3		2	kg
operating temperature		-25		85	°C
life			5,000		cycles
flammability rating	UL94V-0				
RoHS	yes				

SOLDERABILITY

parameter	conditions/description	min	typ	max	units
reel storage	5~25°C, 20~75% humidity				
reflow soldering	see reflow profile	255	260		°C

Note: 1. CUI Devices recommends usage of the product within 24 hours after TBR is opened. After 24 hours, CUI Devices recommends drying the parts prior to use.

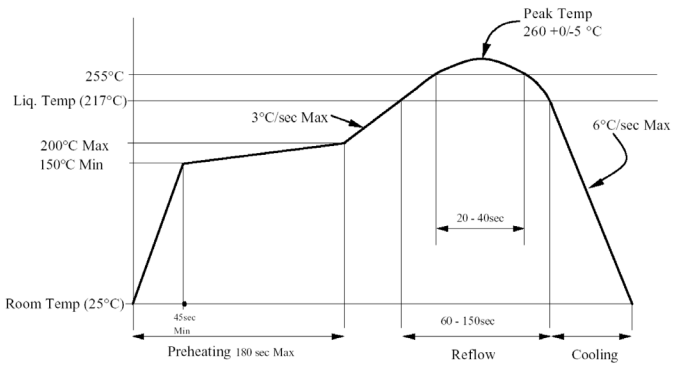

MECHANICAL DRAWING

units: mm
tolerance:
X.X ±0.30 mm
X.XX ±0.25 mm
X.XXX ±0.15 mm
PCB: ±0.05 mm
unless otherwise specified

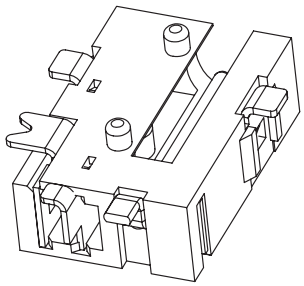

DESCRIPTION	MATERIAL	PLATING/COLOR
center pin	brass	silver over nickel
terminal 1	brass	silver over nickel
terminal 2	berylium bronze t=0.20	gold flash over nickel
terminal 3	brass t=0.20	gold flash over nickel
supports	brass t=0.25	silver over nickel
stopper	brass t=0.25	silver over nickel
housing	PA10T (UL94V-0)	black

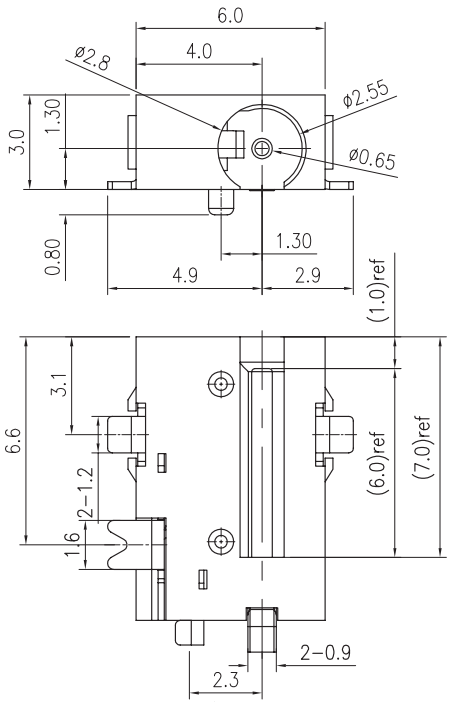

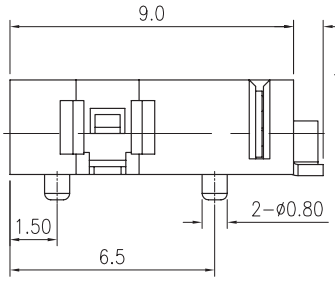

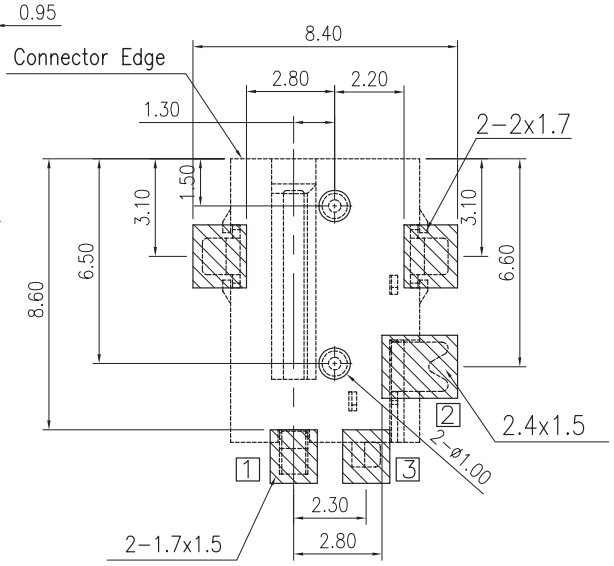

Recommended PCB Layout
Top View

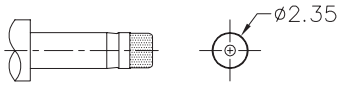

MATING PLUG
Jack Insertion Depth: 7.0mm

SCHEMATIC	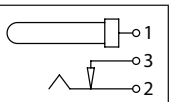
Model	PJ-034-SMT
Center Pin	Ø0.65 mm

PACKAGING

units: mm

Reel Size: Ø330 mm
Reel QTY: 1,000 pcs per reel

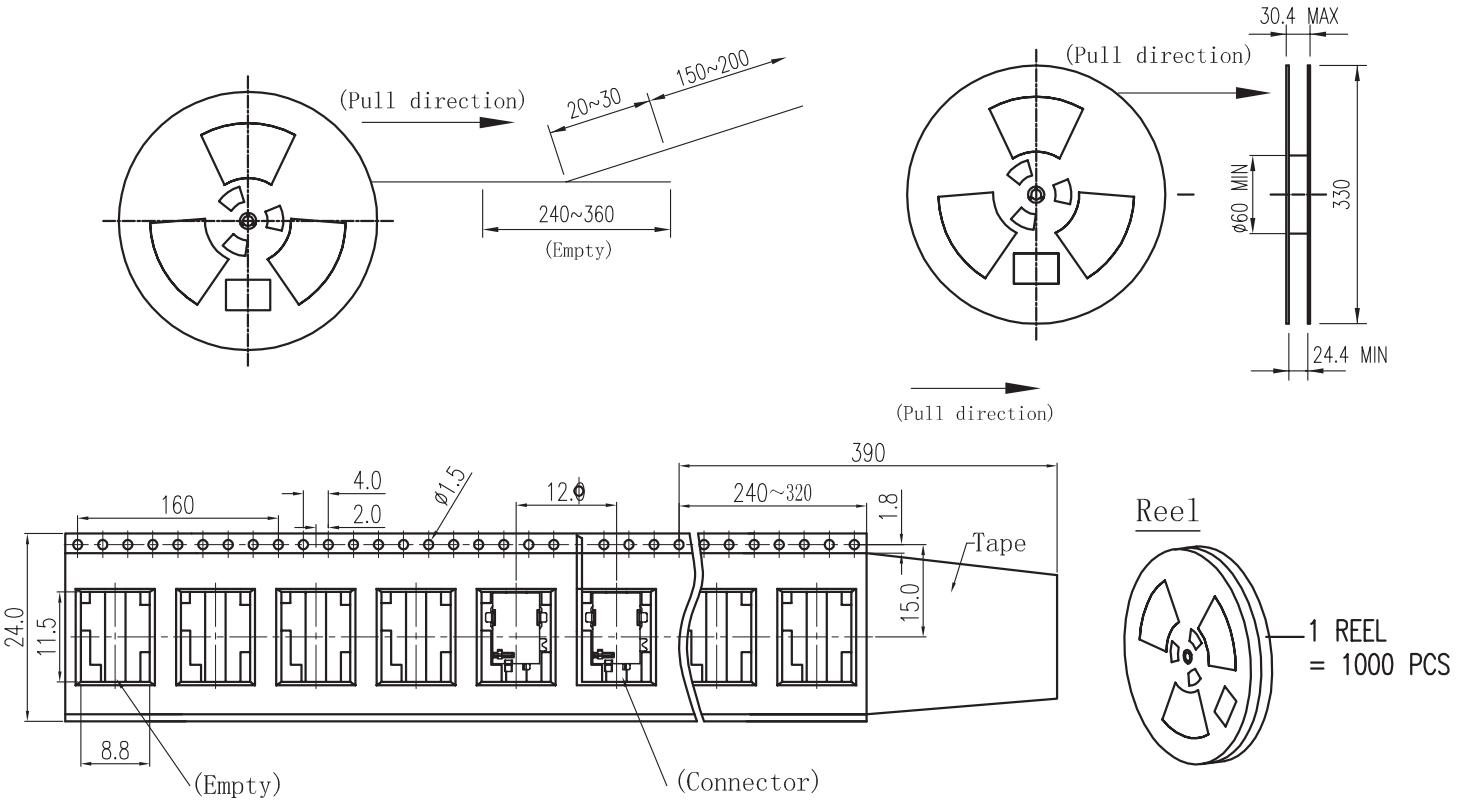

REVISION HISTORY

rev.	description	date
1.0	initial release	02/02/2007
1.01	added TR package option and jack insertion depth	11/07/2012
1.02	applied new spec template	08/28/2013
1.03	terminal 2 material changed to phosphor bronze, appearance of supports modified	05/13/2015
1.04	increased voltage rating	05/18/2016
1.05	added storage and drying conditions, and tape and reel packaging details	07/25/2017
1.06	brand update	10/21/2019
1.07	logo, datasheet style update	08/05/2022
1.08	product reengineered for improved manufacturability and production yield, see PCN for details	01/11/2023

The revision history provided is for informational purposes only and is believed to be accurate.

CUI Devices offers a one (1) year limited warranty. Complete warranty information is listed on our website.

CUI Devices reserves the right to make changes to the product at any time without notice. Information provided by CUI Devices is believed to be accurate and reliable. However, no responsibility is assumed by CUI Devices for its use, nor for any infringements of patents or other rights of third parties which may result from its use.

CUI Devices products are not authorized or warranted for use as critical components in equipment that requires an extremely high level of reliability. A critical component is any component of a life support device or system whose failure to perform can be reasonably expected to cause the failure of the life support device or system, or to affect its safety or effectiveness.

cuidevices.com