Data sheet



AFM60A-S1TA001024

AFS/AFM60 SSI

ABSOLUTE ENCODERS

SICK
Sensor Intelligence.



Illustration may differ

Ordering information

Type	part no.
AFM60A-S1TA001024	1082785

Other models and accessories ➜ www.sick.com/AFS_AFM60_SSI

Detailed technical data

Safety-related parameters

$MTTF_D$ (mean time to dangerous failure)	250 years (EN ISO 13849-1) [1]

[1] This product is a standard product and does not constitute a safety component as defined in the Machinery Directive. Calculation based on nominal load of components, average ambient temperature 40 °C, frequency of use 8760 h/a. All electronic failures are considered hazardous. For more information, see document no. 8015532.

Performance

Number of steps per revolution (max. resolution)	1,024 (10 bit)
Number of revolutions	4,096 (12 bit)
Max. resolution (number of steps per revolution x number of revolutions)	10 bit x 12 bit (1,024 x 4,096)
Error limits G	0.03° [1]
Repeatability standard deviation σ_r	0.002° [2]

[1] In accordance with DIN ISO 1319-1, position of the upper and lower error limit depends on the installation situation, specified value refers to a symmetrical position, i.e. deviation in upper and lower direction is the same.

[2] In accordance with DIN ISO 55350-13; 68.3% of the measured values are inside the specified area.

Interfaces

Communication interface	SSI
Communication Interface detail	SSI + incremental / TTL / TTL
Initialization time	50 ms [1]
Position forming time	< 1 µs
Code type	Gray
Code sequence parameter adjustable	CW/CCW (V/R) parameter adjustable

[1] Valid positional data can be read once this time has elapsed.

[2] Minimum, LOW level (Clock +): 250 ns.

Clock frequency	≤ 2 MHz [2]
Set (electronic adjustment)	H-active (L = 0 - 3 V, H = 4,0 - U_s V)
CW/CCW (counting sequence when turning)	L-active (L = 0 - 1,5 V, H = 2,0 - Us V)
Pulses per revolution	1/4 of number of SSI steps per revolution
Output frequency	≤ 820 kHz
Load current	≤ 30 mA

[1] Valid positional data can be read once this time has elapsed.
[2] Minimum, LOW level (Clock +): 250 ns.

Electronics

Connection type	Male connector, M23, 12-pin, radial
Supply voltage	4.5 ... 32 V
Power consumption	≤ 0.7 W (without load)
Reverse polarity protection	✓

Mechanics

Mechanical design	Solid shaft, Servo flange
Shaft diameter	6 mm
Shaft length	10 mm
Characteristics of the shaft	With flat
Weight	0.3 kg [1]
Shaft material	Stainless steel
Flange material	Aluminum
Housing material	Aluminum die cast
Start up torque	< 0.5 Ncm (+20 °C)
Operating torque	< 0.3 Ncm (+20 °C)
Permissible shaft loading	80 N (radial) 40 N (axial)
Operating speed	≤ 9,000 min^{-1} [2]
Moment of inertia of the rotor	6.2 gcm^2
Bearing lifetime	3.0 x 10^9 revolutions
Angular acceleration	≤ 500,000 rad/s^2

[1] Based on devices with male connector.
[2] Allow for self-heating of 3.3 K per 1,000 rpm when designing the operating temperature range.

Ambient data

EMC	According to EN 61000-6-2 and EN 61000-6-3 [1]
Enclosure rating	IP65, shaft side (IEC 60529) IP67, housing side (IEC 60529) [2]
Permissible relative humidity	90 % (Condensation not permitted)
Operating temperature range	–40 °C ... +100 °C [3]

[1] EMC according to the standards quoted is achieved if shielded cables are used.
[2] For devices with male connector: with mounted mating connector.
[3] Stationary position of the cable.

Storage temperature range	–40 °C ... +100 °C, without package
Resistance to shocks	60 g, 6 ms (EN 60068-2-27)
Resistance to vibration	20 g, 10 Hz ... 2,000 Hz (EN 60068-2-6)

[1] EMC according to the standards quoted is achieved if shielded cables are used.
[2] For devices with male connector: with mounted mating connector.
[3] Stationary position of the cable.

Certificates

EU declaration of conformity	✓
UK declaration of conformity	✓
ACMA declaration of conformity	✓
Moroccan declaration of conformity	✓
China-RoHS	✓
cULus certificate	✓
Information according to Art. 3 of Data Act (Regulation EU 2023/2854)	✓

Classifications

ECLASS 5.0	27270502
ECLASS 5.1.4	27270502
ECLASS 6.0	27270590
ECLASS 6.2	27270590
ECLASS 7.0	27270502
ECLASS 8.0	27270502
ECLASS 8.1	27270502
ECLASS 9.0	27270502
ECLASS 10.0	27270502
ECLASS 11.0	27270502
ECLASS 12.0	27270502
ETIM 5.0	EC001486
ETIM 6.0	EC001486
ETIM 7.0	EC001486
ETIM 8.0	EC001486
UNSPSC 16.0901	41112113

Dimensional drawing

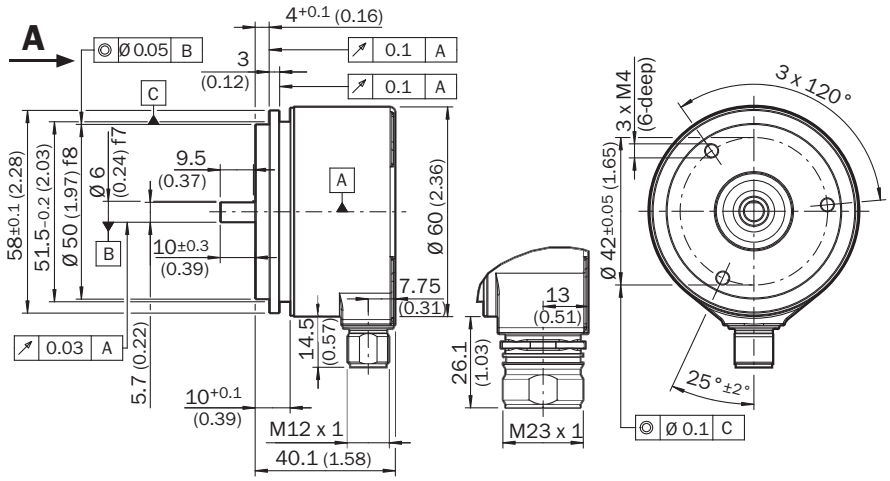

Dimensions in mm (inch)

Attachment specifications

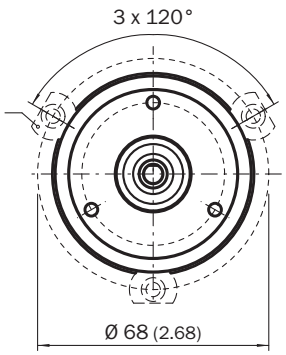

Attachment specifications

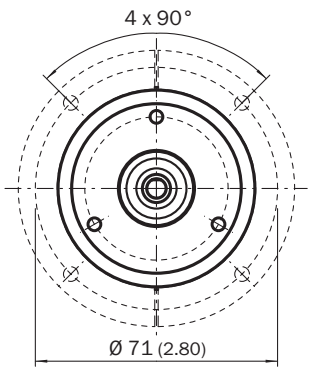

PIN assignment M23 male connector, 12-pin and cable, 12-wire, SSI/Gray + incremental

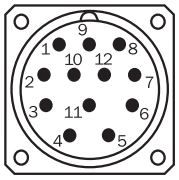

view of M23 male device connector on encoder

PIN	Wire colors (cable connection)	SignalSin/Cos	Explanation
1	Red	U_S	Operating voltage
2	Blue	GND	Ground connection
3	Yellow	Clock +	Interface signals
4	White	Data +	Interface signals
5	Orange	SET	Electronic adjustment
6	Brown	Data -	Interface signals
7	Violet	Clock -	Interface signals
8	Black	$\overline{B}$	Signal wire
9	Orange-black	CW/CCW (V/R)	Sequence in direction of rotation
10	Green	$\overline{A}$	Signal wire
11	Gray	A	Signal wire
12	Pink	B	Signal wire
–	–	Screen	Screen connected to housing on encoder side. Connected to ground on control side.

Diagrams

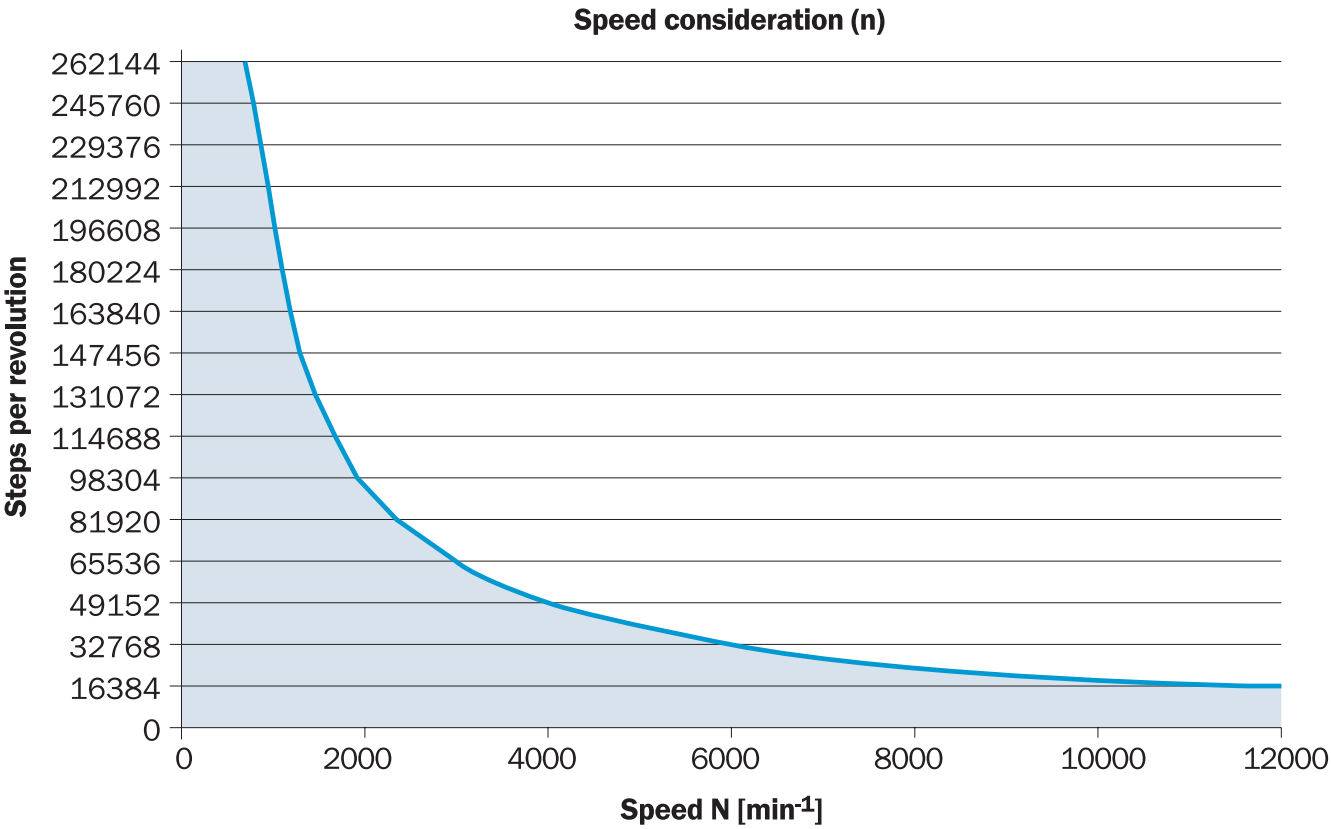

The maximum speed is also dependent on the shaft type.

Recommended accessories

Other models and accessories ➜ www.sick.com/AFS_AFM60_SSI

	Brief description	Type	part no.
shaft adaptation			
	• **Product segment:** Shaft adaptation • **Product:** Shaft couplings • **Description:** Bellows coupling, shaft diameter 6 mm / 10 mm, maximum shaft offset: radial ± 0.25 mm, axial ± 0.4 mm, angular +/- 4°; max. speed 10,000 rpm, –30 °C to +120 °C, max. torque 120 Ncm; material: stainless steel bellows, aluminum hub	KUP-0610-B	5312982
	• **Product segment:** Shaft adaptation • **Product:** Shaft couplings • **Description:** Double loop coupling, shaft diameter 6 mm / 10 mm, max. shaft offset: radially +/- 2,5 mm, axially +/-3 mm, angle +/- 10 degrees;max. speed 3.000 rpm, –30 to +80 degrees Celsius, torsional spring stiffness of 25 Nm/rad	KUP-0610-D	5326697
	• **Product segment:** Shaft adaptation • **Product:** Shaft couplings • **Description:** Spring washer coupling, shaft diameter 6 mm / 10 mm, Maximum shaft offset: radial +/- 0.3 mm, axial +/- 0.4 mm, angular +/- 2.5°; max. speed 12,000 rpm, –10° to +80 °C, max. torque 60 Ncm; material: aluminum flange, glass fiber-reinforced polyamide membrane and hardened steel coupling pin	KUP-0610-F	5312985
	• **Product segment:** Shaft adaptation • **Product:** Shaft couplings • **Description:** Bar coupling, shaft diameter 6 mm / 10 mm, max. shaft offset: radial ± 0,3 mm, axial ± 0,3 mm, angular ± 3°; max. speed 10.000 rpm, –10° to +80 °C, max. torque: 80 Ncm, material: fiber-glass reinforced polyamide, aluminum hub	KUP-0610-S	2056407
	• **Product segment:** Shaft adaptation • **Product:** Shaft couplings • **Description:** Claw coupling, shaft diameter 6 mm / 10 mm, damping element 80 shore blue, maximum shaft offset: radial ± 0.22 mm, axial ± 1 mm angular ± 1.3°, max. speed 19,000 rpm, angle of twist max. 10°, –30 °C to +80 °C, max. torque 800 Ncm, tightening torque of screws: ISO 4029 150 Ncm, material: aluminum flange, damping element: polyurethane	KUP-0610-J	2127056
	• **Product segment:** Shaft adaptation • **Product:** Shaft couplings • **Description:** Bellows coupling, shaft diameter 6 mm / 6 mm, maximum shaft offset: radial ± 0.25 mm, axial ± 0.4 mm, angular +/- 4°; max. speed 10,000 rpm, –30 °C to +120 °C, max. torque 120 Ncm; material: stainless steel bellows, aluminum hub	KUP-0606-B	5312981
	• **Product segment:** Shaft adaptation • **Product:** Shaft couplings • **Description:** Cross-slotted coupling, shaft diameter 6 mm / 6 mm, maximum shaft offset: radial ± 0.3 mm, axial ± 0.2 mm, angle ± 3°; max. speed 10,000 rpm, –10° to +80 °C, max. torque 80 Ncm; material: fiber-glass reinforced polyamide, aluminum hub	KUP-0606-S	2056406
	• **Product segment:** Shaft adaptation • **Product:** Shaft couplings • **Description:** Bar coupling, shaft diameter 6 mm /8 mm, maximum shaft offset radial ± 0.3 mm, axial ± 0.2 mm, angle ± 3°, max. speed 10,000 rpm, torsion spring rigidity 38 Nm/wheel; material: fiber-glass reinforced polyamide, aluminum hub	KUP-0608-S	5314179
Mounting systems			
	• **Description:** Servo clamps, large, for servo flange (clamps, eccentric fastener), 3 pcs, without mounting material • **Items supplied:** Without mounting hardware	BEF-WK-SF	2029166

	Brief description	Type	part no.
connectors and cables			
	• **Connection type head A:** Female connector, M23, 12-pin, angled, A-coded • **Signal type:** HIPERFACE®, SSI, Incremental • **Description:** HIPERFACE®, shieldedSSIIncremental • **Connection systems:** Solder connection	DOS-2312-W01	2072580
	• **Connection type head A:** Female connector, M23, 12-pin, straight, A-coded • **Signal type:** HIPERFACE®, SSI, Incremental • **Description:** HIPERFACE®, shieldedSSIIncremental • **Connection systems:** Solder connection	DOS-2312-G02	2077057
	• **Connection type head A:** Female connector, M23, 12-pin, straight, A-coded • **Signal type:** HIPERFACE®, SSI, Incremental • **Description:** HIPERFACE®, shieldedSSIIncremental • **Connection systems:** Solder connection	DOS-2312-G	6027538
	• **Connection type head A:** Female connector, M23, 12-pin, straight • **Connection type head B:** Flying leads • **Cable:** 3 m, 12-wire • **Description:** Shielded	DOL-2312-G03MMD2	2062300
	• **Connection type head A:** Female connector, M23, 12-pin, straight • **Connection type head B:** Flying leads • **Cable:** 5 m, 12-wire • **Description:** Shielded	DOL-2312-G05MMD2	2062301
	• **Connection type head A:** Female connector, M23, 12-pin, straight • **Connection type head B:** Flying leads • **Cable:** 1.5 m, 12-wire • **Description:** Unshielded	DOL-2312-G1M5MD2	2062284
	• **Connection type head A:** Female connector, M23, 12-pin, straight • **Connection type head B:** Flying leads • **Cable:** 10 m, 12-wire • **Description:** Shielded	DOL-2312-G10MMD2	2062302
	• **Connection type head A:** Female connector, M23, 12-pin, straight • **Connection type head B:** Flying leads • **Cable:** 20 m, 12-wire • **Description:** Shielded	DOL-2312-G20MMD2	2062303
	• **Connection type head A:** Female connector, M23, 12-pin, straight • **Connection type head B:** Flying leads • **Cable:** 30 m, 12-wire • **Description:** Shielded	DOL-2312-G30MMD2	2062304
	• **Connection type head A:** Female connector, M23, 9-pin, straight, A-coded • **Signal type:** HIPERFACE®, SSI, Incremental • **Description:** HIPERFACE®, shieldedSSIIncremental • **Connection systems:** Solder connection	DOS-2309-G	6028533

SICK AT A GLANCE

SICK is one of the leading manufacturers of intelligent sensors and sensor solutions for industrial applications. A unique range of products and services creates the perfect basis for controlling processes securely and efficiently, protecting individuals from accidents and preventing damage to the environment.

We have extensive experience in a wide range of industries and understand their processes and requirements. With intelligent sensors, we can deliver exactly what our customers need. In application centers in Europe, Asia and North America, system solutions are tested and optimized in accordance with customer specifications. All this makes us a reliable supplier and development partner.

Comprehensive services complete our offering: SICK LifeTime Services provide support throughout the machine life cycle and ensure safety and productivity.

For us, that is “Sensor Intelligence.”

WORLDWIDE PRESENCE:

Contacts and other locations –www.sick.com