Apr.1.2024 Copyright 2024 HIROSE ELECTRIC CO., LTD. All Rights Reserved.
In case of consideration for using Automotive equipment / device which demand high reliability, kindly contact our sales window correspondents.

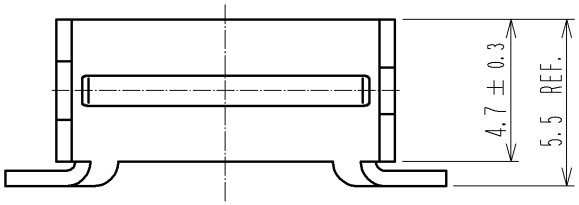

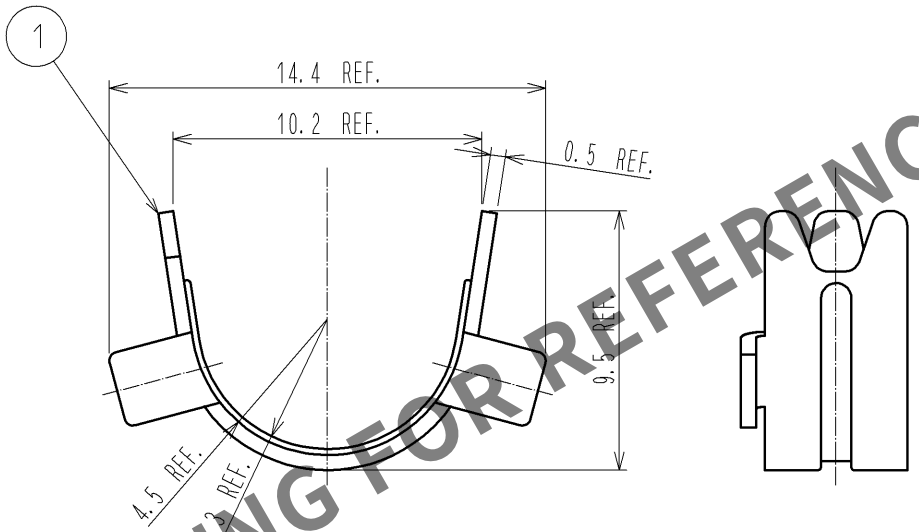

HRS DRAWING FOR REFERENCE

NOTE 1. THIS PRODUCT IS A CLAMP FOR A COVER CASE 'DH-27-C**B'.
2. THE APPLICABLE CABLE DIAMETER IS φ6.9.
△1 3. THIS PRODUCT IS PACKED IN A BAG.
(QUANTITY PER BAG MAY VARY DUE TO THE AMOUNT OF EACH ORDER.)

NO.	MATERIAL	FINISH , REMARKS
1	BRASS	

NO.	MATERIAL	FINISH , REMARKS

UNITS	SCALE		COUNT	DESCRIPTION OF REVISIONS	DESIGNED	CHECKED	DATE
mm	4 : 1	△1	1	DIS-E-003059	MO. SHIMOYAMA	KN. ICHIKAWA	09.12.07

HIROSE ELECTRIC CO., LTD.

APPROVED	AO. SUZUKI	09.10.05
CHECKED	KN. ICHIKAWA	09.10.02
DESIGNED	TU. TANIGUCHI	09.10.02
DRAWN	TU. TANIGUCHI	09.10.02

DRAWING NO.	EDC4-126658-00
PART NO.	DH-27-CMB(7.3)
CODE NO.	CL244-0032-8-00 △1 1/1

FORM HC0011-5-51