EV7770-F-00B

90W Mono Bridge Tied Load Class D Audio Amplifier Evaluation Board

The Future of Analog IC Technology

DESCRIPTION

The EV7770-F-00B is the BTL (Bridge Tied Load) configuration evaluation board for the MP7770GF, which can deliver 90W into 8Ω speaker under 36V VDD. It is one of MPS' products of fully integrated audio amplifiers which dramatically reduce solution size by integrating:

- 100mΩ power MOSFETs
- Startup/Shutdown pop elimination
- Short-circuit protection circuits

MPS's class D audio amplifiers exhibit the high fidelity of a Class A/B amplifier at higher efficiencies. The circuit is based on the MPS's proprietary variable-frequency topology, which delivers excellent linearity, fast response time and operates from a single power supply.

FEATURES

- 90W Output at V_{DD} = 32V into a 6Ω load, 10% THD
- 90W Output at V_{DD} = 36V into a 8Ω load, 10%THD
- THD+N = 0.04% at 1W, 8Ω, 1kHz
- 95% Efficiency at 90W and V_{DD}=36V with 8Ω load
- Low Noise (120μV Typical)
- 9.5V to 36V Operation from a Single Supply

APPLICATIONS

- DVD Receiver
- Mini Combo System
- Home Theater Systems
- Surround Sound Systems
- Audio Docking or High-Power Sound Box

All MPS parts are lead-free and adhere to the RoHS directive. For MPS green status, please visit MPS website under Quality Assurance. "MPS" and "The Future of Analog IC Technology" are Registered Trademarks of Monolithic Power Systems, Inc.

ELECTRICAL SPECIFICATIONS

Parameter	Symbol	Value	Units
Supply Voltage	V_{DD}	9.5~36	V

EV7770-F-00B EVALUATION BOARD

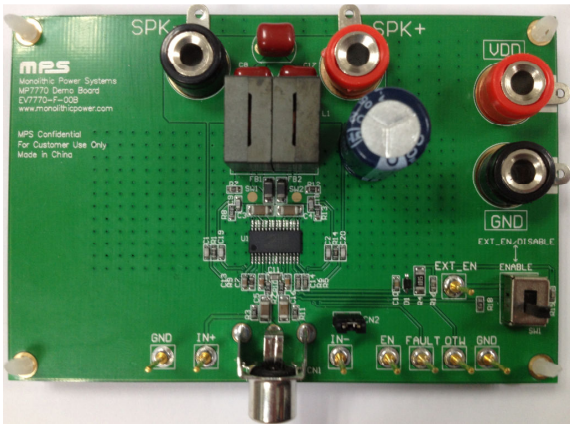

(L x W x H) 4.0" x 2.7" x 1.2"
10.2cm x 6.8cm x 3.1cm

Board Number	MPS IC Number
EV7770-F-00B	MP7770GF

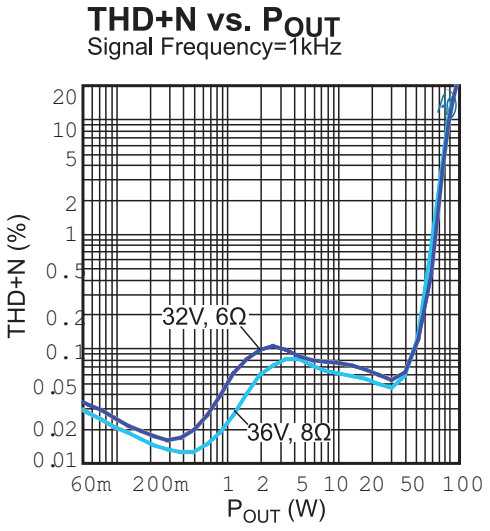

MPS Proprietary Information. Patent Protected. Unauthorized Photocopy and Duplication Prohibited.
© 2013 MPS. All Rights Reserved.

EVALUATION BOARD SCHEMATIC

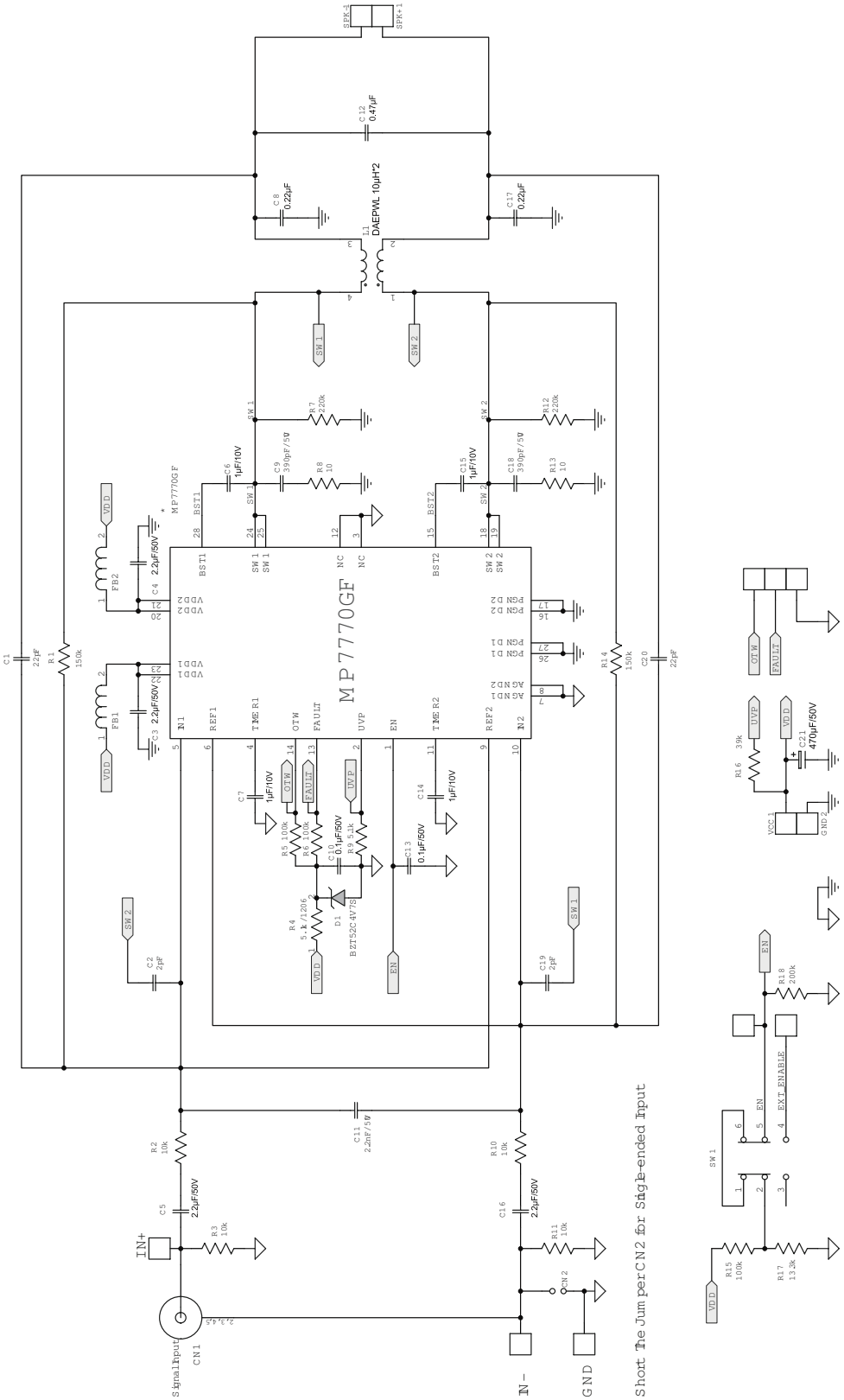

MPS Proprietary Information. Patent Protected. Unauthorized Photocopy and Duplication Prohibited.
© 2013 MPS. All Rights Reserved.

EV7770-F-00B BILL OF MATERIALS

Qty	Ref	Value	Description	Package	Manufacturer	Manufacturer P/N
2	C1, C20	22pF	Ceramic Capacitor; 50V;C0G	0603	TDK	C1608C0G1H220J
2	C2, C19	2pF	Ceramic Capacitor; 50V;C0G	0603	TDK	C1608C0G1H020CT
4	C3, C4, C5, C16	2.2μF	Ceramic Capacitor; 50V;X7R	1206	muRata	GRM31CR71H225KA88L
4	C6, C7, C14, C15	1μF	Ceramic Capacitor; 10V;X7R	0603	muRata	GRM188R71A105KA61D
2	C8, C17	0.22μF	Ceramic Capacitor; 50V;CBB	DIP	Panasonic	ECQV1H224JL
2	C9, C18	390pF	Ceramic Capacitor; 50V;C0G	0603	TDK	C1608C0G1H391J
2	C10, C13	0.1μF	Ceramic Capacitor; 50V;X7R	0603	muRata	GRM188R71H104KA93D
1	C11	2.2nF	Ceramic Capacitor; 50V;C0G	0603	muRata	GRM1885C1H222JA01D
1	C12	0.47μF	Ceramic Capacitor; 50V;CBB	DIP	Panasonic	ECQV1H474JL
1	C21	470μF	Electrolytic Capacitor; 50V	DIP	JiangHai	CD263-50V470
2	R1, R14	150k	Film Resistor;1%	0603	Yageo	RC0603FR-07150KL
4	R2, R3, R10, R11	10k	Film Resistor;1%	0603	Yageo	RC0603FR-0710KL
1	R4	5.1k	Film Resistor;1%	1206	Yageo	RC1206FR-075K1L
3	R5, R6, R15	100k	Film Resistor;1%,	0603	Yageo	RC0603FR-07100KL
2	R7, R12	220k	Film Resistor;1%	0603	Yageo	RC0603FR-07220KL
2	R8, R13	10	Film Resistor;1%	0603	Yageo	RC0603FR-0710RL
1	R9	5.1k	Film Resistor;1%	0603	Yageo	RC0603FR-075K1L
1	R16	39k	Film Resistor;1%	0603	Yageo	RC0603FR-0739KL
1	R17	13.3k	Film Resistor;1%	0603	Yageo	RC0603FR-0713K3L
1	R18	200k	Film Resistor;1%	0603	Yageo	RC0603FR-07200KL
2	FB1, FB2	6A	Magnetic Bead;6A	1206	muRata	BLM31PG330SN1
1	L1	10μH x 2	11A DUAL AUDIO INDUCTOR	DIP	TOKO	DAEPWL-6001WL-M180X
1	D1	BZT52 C4V7S	Zener Diode; 4.7V;5mA	SOD-323	Diodes	BZT52C4V7S-7-F
1	CN1		RCA Connector	DIP	ANY	
1	CN2		2.54mm Male SIP Connector	DIP	ANY	
1	VDD		Female Banana Connector, RED	DIP	ANY	
1	GND		Female Banana Connector, BLACK	DIP	ANY	

MPS Proprietary Information. Patent Protected. Unauthorized Photocopy and Duplication Prohibited.
© 2013 MPS. All Rights Reserved.

EV7770-F-00B BILL OF MATERIALS *(continued)*

Qty	Ref	Value	Description	Package	Manufacturer	Manufacturer P/N
1	SPK+		Female Banana Connector, RED	DIP	ANY	
1	SPK-		Female Banana Connector, BLACK	DIP	ANY	
1	SW1		DPDT Switch	DIP	ANY	
1	U1	MP7770	Class D Audio Amplifier	TSSOP28-EP	MPS	MP7770GF

MPS Proprietary Information. Patent Protected. Unauthorized Photocopy and Duplication Prohibited.
© 2013 MPS. All Rights Reserved.

PRINTED CIRCUIT BOARD LAYOUT

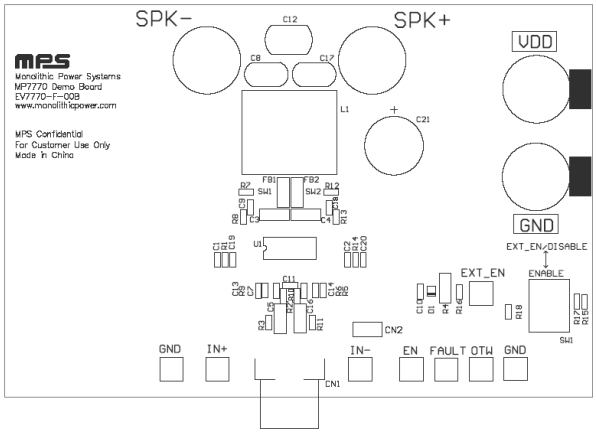

Figure 1—Top Silk Layer

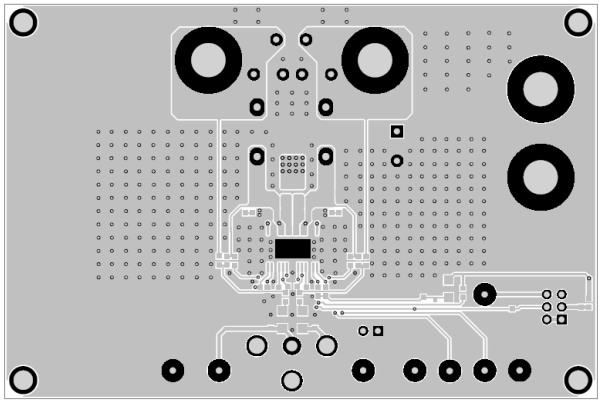

Figure 2—Top Layer

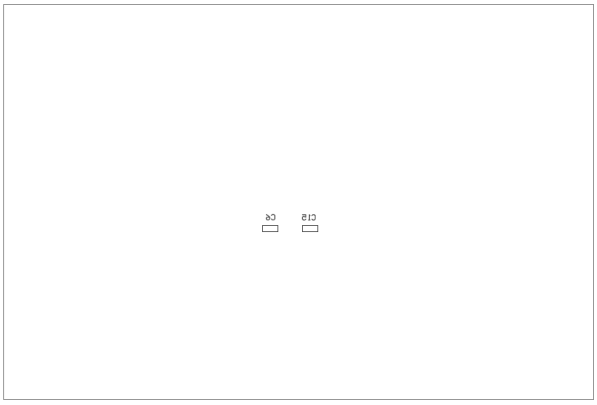

Figure 3—Bottom Silk Layer

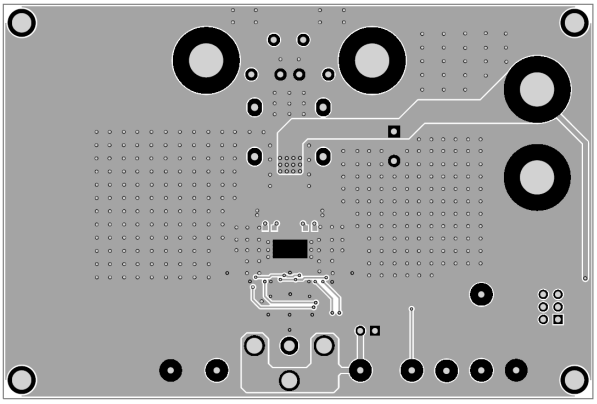

Figure 4—Bottom Layer

MPS Proprietary Information. Patent Protected. Unauthorized Photocopy and Duplication Prohibited.
© 2013 MPS. All Rights Reserved.

QUICK START GUIDE

This evaluation board is set up from the factory for 24V BTL operation. To use with 36V (12V) power supply, adjust the components as specified in the 36V (12V) Operation Modifications section below. To use this evaluation board with differential signal source, please remove the jumper CN2. For more information, consult the MP7770 datasheet for details.

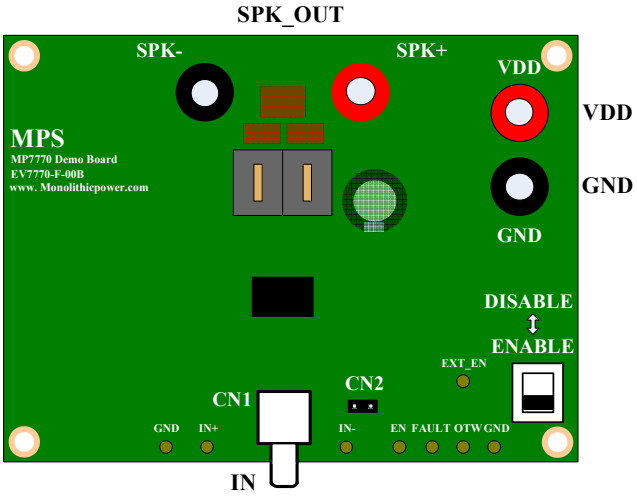

Figure 5—EV7770-F-00B Connection Diagram

1. Power Requirements
    a. Power supply: 9.5V to 36V, 5A maximum.
    b. 0V to 2VRMS (max) audio signal source.
    c. Speaker: typically 4Ω to 8Ω;
2. Setup Condition for 24V Operation
    a. Adjust the power supply to 24V (do not turn on).
    b. Connect the outputs to the external speakers.
    c. Connect the power supply to the VDD terminals.
    d. Set the enable switch to the DISABLE position.
    e. Connect the audio input signal source to the amplifier input (CN1).
    f. Turn on the power supply.
3. 36V Operation Modifications (minimum resistance load is 6 Ω)
    a. Refer to MP7770 Data Sheet Table 3 for frequency optimization.
    b. Change R16 to 64.3k to set 30V VDD shut down voltage.
    c. Adjust the power supply to 36V (do not turn on).
    d. Do as step b~f specified in Section 2.
4. 12V Operation Modifications
    a. Refer to MP7770 Data Sheet Table 3 for frequency optimization.
    b. Change R16 to 16.9kΩ to set 9.5V VDD shutdown voltage.
    c. Adjust R15 to 27kΩ so that the EN voltage is high enough @ 12V VDD.
    d. Adjust the power supply to 12V (do not turn on).
    e. Do as step b~f specified in Section 2.
5. Music Turn-On Sequence
    Set the enable switch to the ENABLE position.
6. Music Turn-Off Sequence
    a. Set the enable switch to the DISABLE position.
    b. Turn off the power supply.

MPS Proprietary Information. Patent Protected. Unauthorized Photocopy and Duplication Prohibited.© 2013 MPS. All Rights Reserved.

INSTRUCTIONS FOR OTW/FAULT INDICATIONS (ERROR REPORTING):

PIN		Error Reporting Description		
FAULT	OTW	Over Temperature Warning	Over Temperature Protection	Over Current Protection
0	0	0	0	0
0	1	**1**	0	0
1	0	0	0	**1**
1	1	0	**1**	0

Note: For more details, please find the datasheet of MP7770.

NOTICE: The information in this document is subject to change without notice. Please contact MPS for current specifications. Users should warrant and guarantee that third party Intellectual Property rights are not infringed upon when integrating MPS products into any application. MPS will not assume any legal responsibility for any said applications.

MPS Proprietary Information. Patent Protected. Unauthorized Photocopy and Duplication Prohibited.
© 2013 MPS. All Rights Reserved.