CUI Devices is now Same Sky! Learn More

same sky

Additional Resources: Product Page | 3D Model | PCB Footprint

MODEL: MJ-63012G | DESCRIPTION: AUDIO JACK

FEATURES

- through hole
- right angle
- 2 conductor
- isolated tip switch



RoHS

SPECIFICATIONS

parameter	conditions/description	min	typ	max	units
rated input voltage			12		Vdc
rated input current				1	A
contact resistance	between terminal and mating plug			30	mΩ
insulation resistance	at 500 Vdc	100			MΩ
voltage withstand	for 1 minute			500	Vac
insertion/withdrawal force		0.4		3	kg
operating temperature		-25		70	°C
life			5,000		cycles
flammability rating	see material table				
RoHS	yes				

SOLDERABILITY

parameter	conditions/description	min	typ	max	units
hand soldering	for 3~5 seconds		360		°C

MECHANICAL DRAWING

units: mm
tolerance: ±0.3 mm

ITEM	DESCRIPTION	MATERIAL	PLATING/COLOR
1	earth terminal	phosphor bronze	silver
2	tip spring	phosphor bronze	silver
3	break terminal	brass	silver
4	transfer terminal	phosphor bronze	silver
5	insulator	POM (UL94HB)	black
6	metal ring	brass	nickel
7	housing	PBT (UL94V-0)	black
8	cover	PC (UL94V-2)	transparent
9	nut	steel	nickel
10	washer	steel	nickel

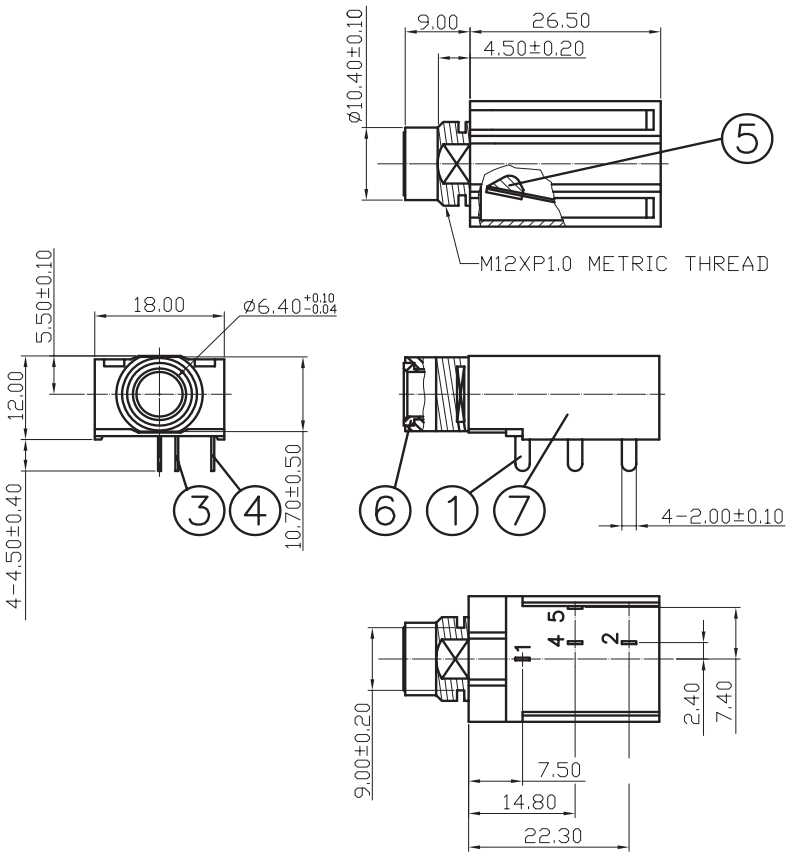

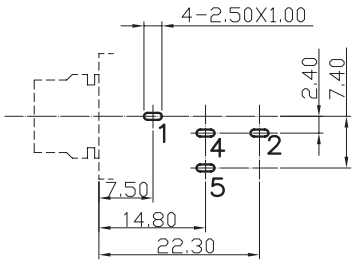

Recommended PCB Layout
Top View

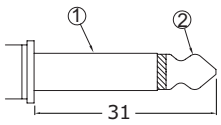

Ø6.35 MATING PLUG

Model No.	MJ-63012G
Schematic	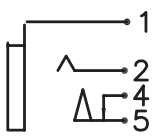
PIN	
1	sleeve
2	tip
4	isolated break terminal (N-C)
5	isolated transfer terminal

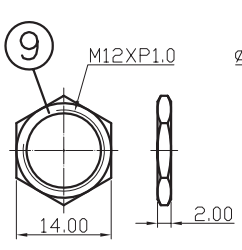

NUT WASHER

REVISION HISTORY

rev.	description	date
1.0	initial release	08/11/2020
1.01	logo, datasheet style update	08/17/2022
1.02	CUI Devices rebranded to Same Sky	09/12/2024

The revision history provided is for informational purposes only and is believed to be accurate.

same sky

Same Sky offers a one (1) year limited warranty. Complete warranty information is listed on our website.

Same Sky reserves the right to make changes to the product at any time without notice. Information provided by Same Sky is believed to be accurate and reliable. However, no responsibility is assumed by Same Sky for its use, nor for any infringements of patents or other rights of third parties which may result from its use.

Same Sky products are not authorized or warranted for use as critical components in equipment that requires an extremely high level of reliability. A critical component is any component of a life support device or system whose failure to perform can be reasonably expected to cause the failure of the life support device or system, or to affect its safety or effectiveness.

sameskydevices.com