Data sheet

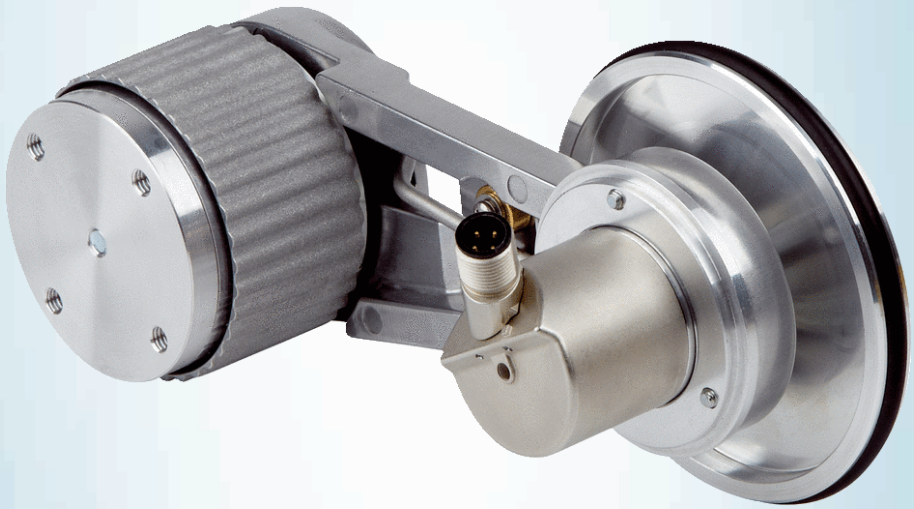

# MWS120-21M2QC14X12

## MWS120

**MEASURING WHEEL ENCODERS**

SICK
Sensor Intelligence.

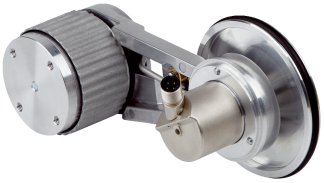

Illustration may differ

## Ordering information

| Type | part no. |
|---|---|
| MWS120-21M2QC14X12 | 1114176 |

**Included in delivery:** AHM36A-SCQC014x12 (1), BEF-MWS120-ARM (1), BEF-FA-020-036 (1), BEF-MR10300AK (1)

Other models and accessories ➜ www.sick.com/MWS120

## Detailed technical data

### Safety-related parameters

| | |
|---|---|
| **$MTTF_D$ (mean time to dangerous failure)** | 240 years (EN ISO 13849-1) [1) 2)] |

[1)] This product is a standard product and does not constitute a safety component as defined in the Machinery Directive. Calculation based on nominal load of components, average ambient temperature 40 °C, frequency of use 8760 h/a. All electronic failures are considered hazardous. For more information, see document no. 8015532.

[2)] Value refers to the mounted encoder.

### Performance

| | |
|---|---|
| **Max. resolution (number of steps per revolution x number of revolutions)** | 14 bit x 12 bit (16,384 x 4,096) |
| **Measuring increment (resolution in mm/pulse)** | 0.018 [1)] [2)] |
| **Repeatability** | < 0.1 mm [3)] |

[1)] Calculation example: Circumference of wheel / pulses per revolution = 200 mm / 16384 pulses per revolution = 0,012mm/pulse.

[2)] Value based on measuring wheel circumference. The measuring wheel circumference depends on manufacturing tolerances, wear and tear, the selected spring tensioning force, and the behavior of the measurement wheel surface at different temperatures and on different measurement surfaces. To obtain the most accurate measurement results, we recommend performing a reference run for positioning tasks so that application-specific measuring wheel characteristics can be taken into account.

[3)] Value is based on the mechanics. Backlash of the measuring wheel mechanics, is at a minimum. This enables a precise and repeatable measurement results.

### Interfaces

| | |
|---|---|
| **Communication interface** | IO-Link |
| **Communication Interface detail** | IO-Link V1.1 / COM3 (230,4 kBaud) |

### Electrical data

| | |
|---|---|
| **Connection type** | Male connector, M12, 4-pin, universal |
| **Power consumption** | ≤ 1.5 W |
| **Supply voltage** | 18 V ... 30 V |
| **Reverse polarity protection** | ✓ |

## Mechanical data

| | |
|---|---|
| **Measuring wheel circumference** | 300 mm [1] |
| **Measuring wheel surface** | Cross knurled aluminium |
| **Mounting** | Measuring wheel mounted at the front |
| **Spring arm mechanism material** | |
| Spring element | Stainless steel |
| Measuring wheel, spring arm | Aluminum |
| **Start up torque** | < 1 Ncm |
| **Operating torque** | < 1 Ncm |
| **Bearing lifetime** | 3.6 x 10^8 revolutions |
| **Minimum spring tension force** | 4 N [2] [3] |
| **Max. permissible working area for the spring (continuous operation)** | ± 10 mm |
| **Service life of spring element** | > 1.5 million cycles |
| **Mounting position relative to the measuring object** | Preferably from above, from below possible [4] |
| **Mounted encoder** | AHM36 IO-Link Advanced, AHM36A-SCQC014x12, 1101537 |
| **Flange plates** | BEF-FA-020-036, 2072298 |
| **Mounted mechanic** | BEF-MWS120-ARM, 2118239 |
| **Attached measuring wheel** | BEF-MR10300AK, 2115703 |

[1] The surface of a measuring wheel is subject to wear. This depends on contact pressure, acceleration behavior in the application, traversing speed, measurement surface, mechanical alignment of the measuring wheel, temperature, and ambient conditions. We recommend you regularly check the condition of the measuring wheel and replace as required.

[2] The right spring tension force for the application shall keep the slippage at a minimum in the application working conditions and measuring surface, without damaging the measuring surface.

[3] The clamping force can be set in 6 fixed increments of 4 N. 4 N corresponds to one increment.

[4] When mounted from below, the encoder weight during spring pretensioning must be taken into account.

## Ambient data

| | |
|---|---|
| **EMC** | According to EN 61000-6-2, EN 61000-6-3 and EN 61131-9 |
| **Operating temperature range** | –30 °C ... +80 °C [1] |
| **Storage temperature range** | –40 °C ... +100 °C [1] |

[1] This value reflects the smallest temperature value of the installed products. For more information, please look at the individual data sheets.

## Certificates

| | |
|---|---|
| **EU declaration of conformity** | ✓ |
| **UK declaration of conformity** | ✓ |
| **ACMA declaration of conformity** | ✓ |
| **Moroccan declaration of conformity** | ✓ |
| **China-RoHS** | ✓ |

## Classifications

| | |
|---|---|
| **ECLASS 5.0** | 27270501 |
| **ECLASS 5.1.4** | 27270501 |
| **ECLASS 6.0** | 27270590 |
| **ECLASS 6.2** | 27270590 |

| | |
|---|---|
| **ECLASS 7.0** | 27270501 |
| **ECLASS 8.0** | 27270501 |
| **ECLASS 8.1** | 27270501 |
| **ECLASS 9.0** | 27270501 |
| **ECLASS 10.0** | 27270790 |
| **ECLASS 11.0** | 27270707 |
| **ECLASS 12.0** | 27270504 |
| **ETIM 5.0** | EC001486 |
| **ETIM 6.0** | EC001486 |
| **ETIM 7.0** | EC001486 |
| **ETIM 8.0** | EC001486 |
| **UNSPSC 16.0901** | 41112113 |

## Dimensional drawing

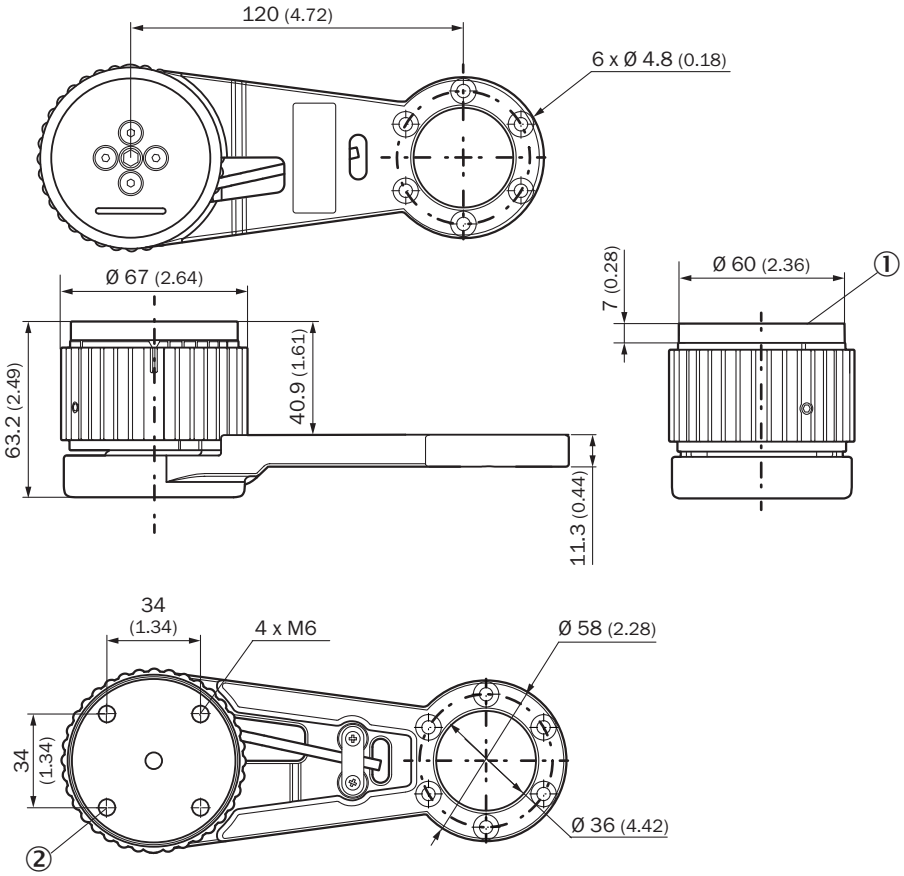


Dimensions in mm (inch)
① Adapter plate
② Holes of the adapter plate, maximum thread depth 6 mm

## Dimensional drawing

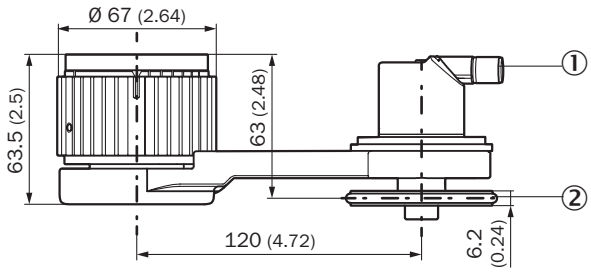


Dimensions in mm (inch)
① Please refer to the dimensional drawings in the respective data sheet for the installed encoder.
② The measuring wheel circumference and surface depend on the installed measuring wheel.

## PIN assignment

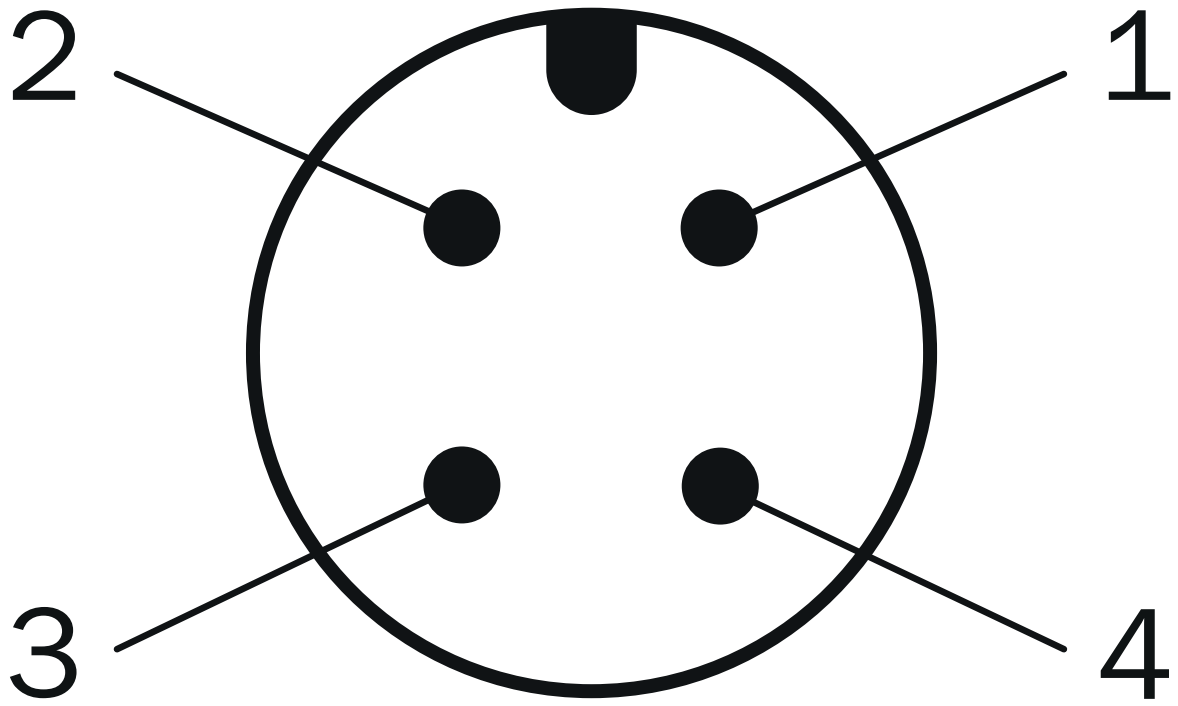


| PIN | Wire color | Signal | Function | | |
|---|---|---|---|---|---|
| – | – | – | Basic | Advanced | Advanced Smart Task |
| 1 | Brown | L+ | Encoder supply voltage 18-30 V (+Us) | | |
| 2 | White | I/Q | Not connected - no function | Multifunctional pin (configurable as switching input or switching output) | |
| 3 | Blue | L- | Encoder supply voltage 0 V (GND) | | |
| 4 | Black | C/Q | IO-Link communication | | |

| PIN | Wire color | Signal | Function | |
|---|---|---|---|---|
| | | – | - | Switching output (SIO mode) |

## Recommended accessories

Other models and accessories ➜ www.sick.com/MWS120

| | Brief description | Type | part no. |
|---|---|---|---|
| measuring wheels and measuring wheel mechanics | | | |
|  | • **Product segment:** Measuring wheels and measuring wheel mechanics<br>• **Product family:** Measuring wheels<br>• **Description:** Aluminium measuring wheel with O-ring (NBR70) for 10 mm solid shaft, circumference 200 mm | BEF-MR010020R | 2055224 |
|  | • **Product segment:** Measuring wheels and measuring wheel mechanics<br>• **Product family:** Measuring wheels<br>• **Description:** Aluminium measuring wheel with O-ring (NBR70) for 10 mm solid shaft, circumference 300 mm | BEF-MR010030R | 2049278 |
|  | • **Product segment:** Measuring wheels and measuring wheel mechanics<br>• **Product family:** Measuring wheels<br>• **Description:** Measuring wheel with O-ring (NBR70) for 10 mm solid shaft, circumference 500 mm | BEF-MR010050R | 2055227 |
|  | • **Product segment:** Measuring wheels and measuring wheel mechanics<br>• **Product family:** Measuring wheels<br>• **Description:** Aluminum measuring wheel with cross-knurled surface for 10 mm solid shaft, circumference 500 mm | BEF-MR10500AK | 4084733 |
|  | • **Product segment:** Measuring wheels and measuring wheel mechanics<br>• **Product family:** Measuring wheels<br>• **Description:** Aluminum measuring wheel with cross-knurled surface for 10 mm solid shaft, circumference 200 mm | BEF-MR10200AK | 4084737 |
| 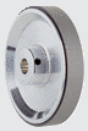 | • **Product segment:** Measuring wheels and measuring wheel mechanics<br>• **Product family:** Measuring wheels<br>• **Description:** Aluminum measuring wheel with smooth polyurethane surface for 10 mm solid shaft, circumference 200 mm | BEF-MR10200AP | 4084738 |
|  | • **Product segment:** Measuring wheels and measuring wheel mechanics<br>• **Product family:** Measuring wheels<br>• **Description:** Aluminum measuring wheel with ridged polyurethane surface for 10 mm solid shaft, circumference 200 mm | BEF-MR10200APG | 4084740 |
| | • **Product segment:** Measuring wheels and measuring wheel mechanics<br>• **Product family:** Measuring wheels | BEF-MR10200APN | 4084739 |

| | Brief description | Type | part no. |
|---|---|---|---|
| | • **Description:** Aluminum measuring wheel with studded polyurethane surface for 10 mm solid shaft, circumference 200 mm | | |
|  | • **Product segment:** Measuring wheels and measuring wheel mechanics<br>• **Product family:** Measuring wheels<br>• **Description:** Aluminum measuring wheel with smooth polyurethane surface for 10 mm solid shaft, circumference 500 mm | BEF-MR10500AP | 4084734 |
|  | • **Product segment:** Measuring wheels and measuring wheel mechanics<br>• **Product family:** Measuring wheels<br>• **Description:** Aluminum measuring wheel with ridged polyurethane surface for 10 mm solid shaft, circumference 500 mm | BEF-MR10500APG | 4084736 |
|  | • **Product segment:** Measuring wheels and measuring wheel mechanics<br>• **Product family:** Measuring wheels<br>• **Description:** Aluminum measuring wheel with studded polyurethane surface for 10 mm solid shaft, circumference 500 mm | BEF-MR10500APN | 4084735 |
|  | • **Product segment:** Measuring wheels and measuring wheel mechanics<br>• **Product family:** Measuring wheel mechanics<br>• **Description:** Spring arm for linear measurement with contact, spring contact pressure manually adjustable without tools in 6 increments of 4 N from 0 ... 24 N, can be combined with separately available encoders and measuring wheels.<br>• **Items supplied:** MWS120 spring arm (part number: 2118239), 3 pcs. M4 x 16 cylinder head screws for adapter or encoder mounting<br>• **Suitable for:** MWS120, direct mounting Ø 60 mm face mount flange encoder with mechanical shaft design “S4” = Ø 10 mm, DBS60, DFS60, AFS60 AFM60. Ø 36 mm encoders such as AHS/ | BEF-MWS120-ARM | 2118239 |

| | Brief description | Type | part no. |
|---|---|---|---|
| | AHM36 can be mounted with an adapter flange (part no.: 2072298), MWS120 mounting bracket (part number: 2113284) | | |
|  | • **Product segment:** Measuring wheels and measuring wheel mechanics<br>• **Product family:** Measuring wheels<br>• **Description:** Mounting bracket for MWS120 measuring wheel system and SPEETEC 1D laser surface motion sensors<br>• **Suitable for:** MWS120, NCV50 (in conjunction with BEF-WN-NCV50 mounting bracket part no.: 2117456) | BEF-WF-MWS-NCV | 2113284 |
|  | • **Product segment:** Measuring wheels and measuring wheel mechanics<br>• **Product family:** Measuring wheels<br>• **Description:** Aluminum measuring wheel with cross-knurled surface for 10 mm solid shaft, circumference 300 mm | BEF-MR10300AK | 2115703 |
|  | • **Product segment:** Measuring wheels and measuring wheel mechanics<br>• **Product family:** Measuring wheels<br>• **Description:** Aluminum measuring wheel with smooth polyurethane surface for 10 mm solid shaft, circumference 300 mm | BEF-MR10300AP | 2118512 |
|  | • **Product segment:** Measuring wheels and measuring wheel mechanics<br>• **Product family:** Measuring wheels<br>• **Description:** Aluminum measuring wheel with ridged polyurethane surface for 10 mm solid shaft, circumference 300 mm | BEF-MR10300APG | 2118496 |
|  | • **Product segment:** Measuring wheels and measuring wheel mechanics<br>• **Product family:** Measuring wheels<br>• **Description:** Aluminum measuring wheel with studded polyurethane surface for 10 mm solid shaft, circumference 300 mm | BEF-MR10300APN | 2118494 |
| Mounting systems | | | |
|  | • **Description:** Flange adapter, adapts face mount flange with 20 mm centering collar to 36 mm servo flange<br>• **Items supplied:** Flange adapter, screws for encoder mounting (3 pcs. M3 x 14 cylinder head) | BEF-FA-020-036 | 2072298 |

| | Brief description | Type | part no. |
|---|---|---|---|
| connectors and cables | | | |
|  | • **Connection type head A:** Female connector, M12, 4-pin, straight, A-coded<br>• **Description:** Unshielded<br>• **Connection systems:** Screw-type terminals<br>• **Permitted cross-section:** ≤ 0.75 mm² | DOS-1204-G | 6007302 |
|  | • **Connection type head A:** Female connector, M12, 4-pin, straight, A-coded<br>• **Connection type head B:** Flying leads<br>• **Signal type:** Sensor/actuator cable<br>• **Cable:** 2 m, 4-wire, PUR, halogen-free<br>• **Description:** Sensor/actuator cable, unshielded<br>• **Application:** Uncontaminated zones, Zones with oils and lubricants, Robot, Drag chain operation | YF2A14-020UB3XLEAX | 2095607 |
|  | • **Connection type head A:** Female connector, M12, 4-pin, straight, A-coded<br>• **Connection type head B:** Flying leads<br>• **Signal type:** Sensor/actuator cable<br>• **Cable:** 5 m, 4-wire, PUR, halogen-free<br>• **Description:** Sensor/actuator cable, unshielded<br>• **Application:** Uncontaminated zones, Zones with oils and lubricants, Robot, Drag chain operation | YF2A14-050UB3XLEAX | 2095608 |
|  | • **Connection type head A:** Female connector, M12, 4-pin, straight, A-coded<br>• **Connection type head B:** Flying leads<br>• **Signal type:** Sensor/actuator cable<br>• **Cable:** 10 m, 4-wire, PUR, halogen-free<br>• **Description:** Sensor/actuator cable, unshielded<br>• **Application:** Uncontaminated zones, Zones with oils and lubricants, Robot, Drag chain operation | YF2A14-100UB3XLEAX | 2095609 |
|  | • **Connection type head A:** Female connector, M12, 4-pin, straight, A-coded<br>• **Connection type head B:** Male connector, M12, 4-pin, straight, A-coded<br>• **Signal type:** Sensor/actuator cable<br>• **Cable:** 2 m, 4-wire, PUR, halogen-free<br>• **Description:** Sensor/actuator cable, unshielded<br>• **Application:** Uncontaminated zones, Zones with oils and lubricants, Robot, Drag chain operation | YF2A14-020UB3M2A14 | 2096000 |
|  | • **Connection type head A:** Female connector, M12, 4-pin, straight, A-coded<br>• **Connection type head B:** Male connector, M12, 4-pin, straight, A-coded<br>• **Signal type:** Sensor/actuator cable<br>• **Cable:** 5 m, 4-wire, PUR, halogen-free<br>• **Description:** Sensor/actuator cable, unshielded<br>• **Application:** Uncontaminated zones, Zones with oils and lubricants, Robot, Drag chain operation | YF2A14-050UB3M2A14 | 2096001 |
|  | • **Connection type head A:** Female connector, M12, 4-pin, straight, A-coded<br>• **Connection type head B:** Male connector, M12, 4-pin, straight, A-coded<br>• **Signal type:** Sensor/actuator cable<br>• **Cable:** 10 m, 4-wire, PUR, halogen-free<br>• **Description:** Sensor/actuator cable, unshielded<br>• **Application:** Uncontaminated zones, Zones with oils and lubricants, Robot, Drag chain operation | YF2A14-100UB3M2A14 | 2096002 |
|  | • **Connection type head A:** Female connector, M12, 4-pin, straight, A-coded<br>• **Connection type head B:** Flying leads<br>• **Signal type:** Sensor/actuator cable<br>• **Cable:** 0.6 m, 4-wire, PUR, halogen-free<br>• **Description:** Sensor/actuator cable, unshielded<br>• **Application:** Uncontaminated zones, Zones with oils and lubricants, Robot, Drag chain operation | YF2A14-C60UB3XLEAX | 2145654 |
|  | • **Connection type head A:** Female connector, M12, 4-pin, straight, A-coded<br>• **Connection type head B:** Flying leads<br>• **Signal type:** Sensor/actuator cable<br>• **Cable:** 1 m, 4-wire, PUR, halogen-free<br>• **Description:** Sensor/actuator cable, unshielded<br>• **Application:** Uncontaminated zones, Zones with oils and lubricants, Robot, Drag chain operation | YF2A14-010UB3XLEAX | 2145655 |
|  | • **Connection type head A:** Female connector, M12, 4-pin, straight, A-coded<br>• **Connection type head B:** Flying leads<br>• **Signal type:** Sensor/actuator cable<br>• **Cable:** 3 m, 4-wire, PUR, halogen-free<br>• **Description:** Sensor/actuator cable, unshielded<br>• **Application:** Uncontaminated zones, Zones with oils and lubricants, Robot, Drag chain operation | YF2A14-030UB3XLEAX | 2145656 |
| network devices | | | |
|  | | IOLA2US-01101 (SiLink2 Master) | 1061790 |

# SICK AT A GLANCE

SICK is one of the leading manufacturers of intelligent sensors and sensor solutions for industrial applications. A unique range of products and services creates the perfect basis for controlling processes securely and efficiently, protecting individuals from accidents and preventing damage to the environment.

We have extensive experience in a wide range of industries and understand their processes and requirements. With intelligent sensors, we can deliver exactly what our customers need. In application centers in Europe, Asia and North America, system solutions are tested and optimized in accordance with customer specifications. All this makes us a reliable supplier and development partner.

Comprehensive services complete our offering: SICK LifeTime Services provide support throughout the machine life cycle and ensure safety and productivity.

**For us, that is “Sensor Intelligence.”**

# WORLDWIDE PRESENCE:

Contacts and other locations –www.sick.com