T3609290111-000 ✔ ACTIVE

HDC

TE Internal #: T3609290111-000

Cable Gland

View on TE.com >

Connectors > Connector Accessories > Connector Strain Relief





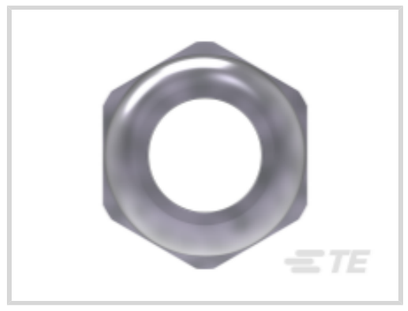

Strain Relief Accessory Type: **Cable Gland**

Sealable: **Yes**

Features

Product Type Features

Strain Relief Accessory Type	Cable Gland
Sealable	Yes

Product Compliance

For compliance documentation, visit the product page on TE.com>

EU RoHS Directive 2011/65/EU	Compliant with Exemptions
EU ELV Directive 2000/53/EC	Compliant
China RoHS 2 Directive MIIT Order No 32, 2016	Restricted Materials Above Threshold
EU REACH Regulation (EC) No. 1907/2006	Current ECHA Candidate List: JAN 2024 (240) Candidate List Declared Against: JUNE 2023 (235) SVHC > Threshold: Pb (2.8% in Component Part) **Article Safe Usage Statements:** Do not eat, drink or smoke when using this product. Wash thoroughly after handling. Recycle if possible and dispose of the article by following all applicable governmental regulations relevant to your geographic location.
Halogen Content	Low Halogen - Br, Cl, F, I < 900 ppm per homogenous material. Also BFR/CFR/PVC Free
Solder Process Capability	Not reviewed for solder process capability

Product Compliance Disclaimer

This information is provided based on reasonable inquiry of our suppliers and represents our current actual knowledge based on the information they provided. This information is subject to change. The part numbers that TE has identified as EU RoHS compliant have a maximum concentration of 0.1% by weight in homogenous materials for lead, hexavalent chromium, mercury, PBB, PBDE, DBP, BBP, DEHP, DIBP, and 0.01% for cadmium, or qualify for an exemption to these limits as defined in the Annexes of Directive 2011/65/EU (RoHS2). Finished electrical and electronic equipment products will be CE marked as required by Directive 2011/65/EU. Components may not be CE marked. Additionally, the part numbers that TE has identified as EU ELV compliant have a maximum concentration of 0.1% by weight in homogenous materials for lead, hexavalent chromium, and mercury, and 0.01% for cadmium, or qualify for an exemption to these limits as defined in the Annexes of Directive 2000/53/EC (ELV). Regarding the REACH Regulation, the information TE provides on SVHC in articles for this part number is based on the latest European Chemicals Agency (ECHA) 'Guidance on requirements for substances in articles' posted at this URL: https://echa.europa.eu/guidance-documents/guidance-on-reach

Compatible Parts



TE Part # T1910240129-000
H24BPR-TSH-PG29

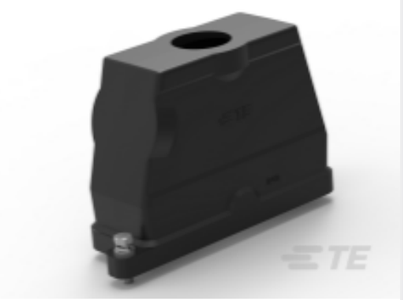

TE Part # T1920240129-000
H24BPR-TGH-PG29



TE Part # T3165290101-000
BLIND-29-MS



TE Part # T1790242129-000
H24B-TBFH-PG29



TE Part # T1902101229-000
H10BPR-TS/GHC-2PG29



TE Part # T1902241229-000
H24BPR-TS/GHC-2PG29



TE Part # T1910161129-000
H16BPR-TSH-PG29

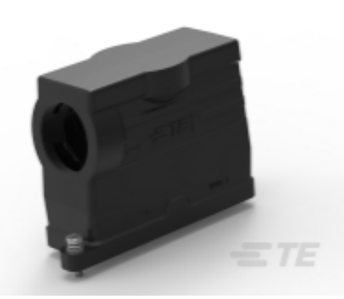

TE Part # T1910240129-002
H24BPR-TSH-XL-PG29



TE Part # T1910241129-000
H24BPR-TSH-PG29



TE Part # T1912100129-000
H10BPR-TSHC-PG29



TE Part # T1912101129-000
H10BPR-TSHC-PG29



TE Part # T1912102129-000
H10BPR-TSHC-PG29



TE Part # T1916240129-001
H24BPR-TSH-4S-PG29



TE Part # T1920161129-000
H16BPR-TGH-PG29



TE Part # T1922100129-000
H10BPR-TGHC-PG29



TE Part # T1922101129-000
H10BPR-TGHC-PG29



TE Part # T1922102129-000
H10BPR-TGHC-PG29



TE Part # T1922160129-000
H16BPR-TGHC-PG29



TE Part # T1926240129-001
H24BPR-TGH-4S-PG29



TE Part # T3033212902-000
INCR-21/29-PG

Customers Also Bought

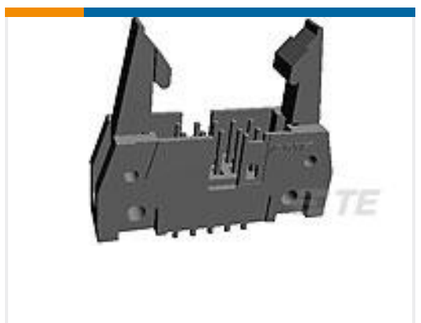

TE Part # 5499160-1
A/L UNIV HDR 10P VERT SHT LAT



TE Part # T2100042201-000
HK4/0-004-F,WITH ONE SLOT SCREW



TE Part # T2050462201-000
HEE-046-F

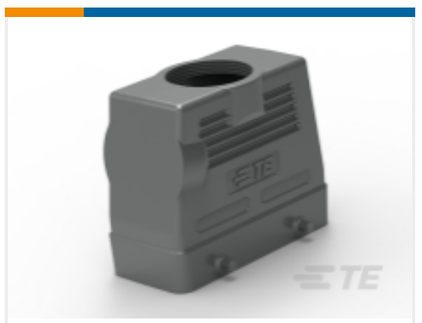

TE Part # T1240160129-000
H16B-TGH-PG29



TE Part # 1586076-1
02P UMNL PIN HDR W/O DRNS V2



TE Part # 1393255-8
W93-X112-30=M6/M7/M9/W6/W7



TE Part # T1230240129-000
H24B-TSH-PG29



TE Part # T1410242000-000
H24B-AG

Documents

Product Drawings

DLX-29-MTS

English

CAD Files

3D PDF

3D

Customer View Model

ENG_CVM_CVM_T3609290111-000_A.2d_dxf.zip

English

Customer View Model

ENG_CVM_CVM_T3609290111-000_A.3d_igs.zip

English

Customer View Model

ENG_CVM_CVM_T3609290111-000_A.3d_stp.zip

English

By downloading the CAD file I accept and agree to the Terms and Conditionsof use.

Datasheets & Catalog Pages

Heavy Duty Connectors

English

HEAVY DUTY CONNECTORS

English

HEAVY DUTY CONNECTORS

Japanese

Product Specifications

Application Specification

English