REVISIONS			
REV	DESCRIPTION, ECN, EAR NO.	DATE	APP'D
B	UPDATE NOTES TO CLARIFY PLUG SHIELD AND BOOT MATERIAL	OCT11/23	K.T
C	UPDATE 90 DEGREE PLUG APPEARANCE UPDATE BOOT TO OVERMOLD	DEC12/23	K.T
D	UPDATE 90 DEGREE PLUG APPEARANCE	JAN16/24	K.T

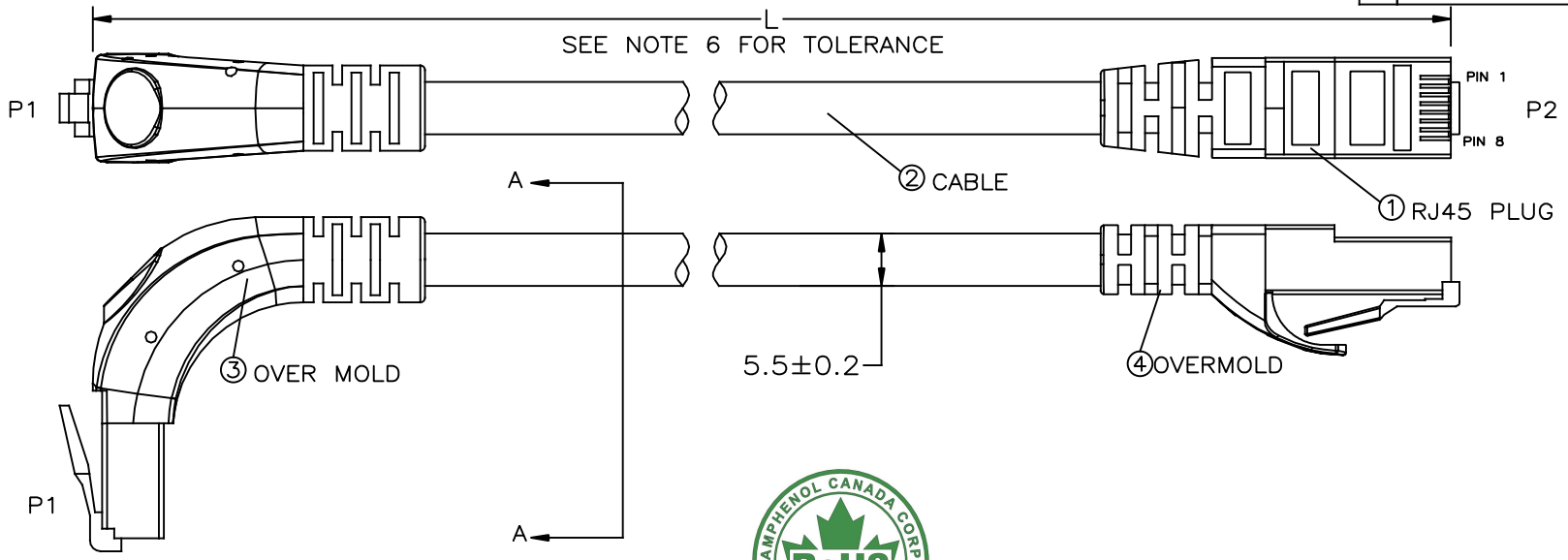

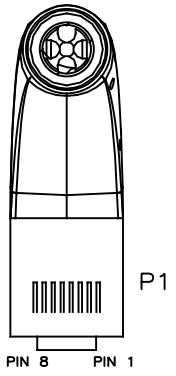

SECTION A–A

NOTES:

1. MATERIALS:
   PART 1) RJ45 PLUG
   HOUSING: ENGINEERING THERMOPLASTIC, UL94 V–0, TRANSPARENT
   CONTACTS: BRASS WITH NICKEL PLATED
   PLATING: SELECTIVE GOLD ON MATING SURFACES.
   50μ"[1.27 MICRONS] MIN. NICKEL UNDERPLATE.
   SHIELD: BRASS WITH NICKEL PLATED
   PART 2) CABLE:
   JACKET: PVC, OUTER DIAMETER: 5.5mm,
   CONDUCTORS: BARE COPPER, 26AWG(7/0.16)*4P F/UTP CAT5e CABLE.
   PART 3) OVER MOLD: ENGINEERING THERMOPLASTIC
   PART 4) OVERMOLD: PVC

2. ELECTRICAL
   INSULATION RESISTANCE: 100M OHM
   WITHSTANDING VOLTAGE: 300V DC
   CONDUCTION RESISTANCE: L≤5M, 2 OHM MAX;
   5<L≤15M, 3 OHM MAX;
   15<L≤35M, 5 OHM MAX;
   35<L≤60M, 10 OHM MAX;
   OPEN/SHORT TEST: 100% TEST

3. SIGNAL
   CAT5e CHANNEL REQUIREMENTS

4. OPERATING TEMPERATURE: –20°C TO 75°C

5. PLUG MECHANICAL AND DIMENSIONS CONFORM TO TIA 1096.

6. TOLERACNE OF CABLE LENGTH:
   L≤0.3M, +25MM/–0; 0.3<L≤1.5M, +50MM/–0;
   1.5<L≤3.0M, +100MM/–0; 3.0<L≤7.5M, +150MM/–0;
   L>7.5M, +5%/–0

AMPHENOL CANADA CORP RoHS COMPLIANT 2011/65/EU RECAST

ORDERING CODE: RJE1Y–1X XXX95–AX01

COLOR CODE:

1=WHITE	5=YELLOW
2=BLACK	6=BLUE
3=GREY	7=PURPLE
4=GREEN	8=RED

CONTACT & GOLD PLATING CODE:
1=8P8C, GOLD FLASH;2=8P8C, 8u"
3=8P8C, 30u"; 4=8P8C, 50u"

LENGTH CODE:

LENGTH IN MM	200 TO 999
1 METER + 00 TO 99 CENTIMETERS	A00 TO A99
2 METER + 00 TO 99 CENTIMETERS	B00 TO B99
3 METER + 00 TO 99 CENTIMETERS	C00 TO C99
4 METER + 00 TO 9 CENTIMETERS	D00 TO D99
5 METER + 00 TO 99 CENTIMETERS	E00 TO E99
6 METER + 00 TO 99 CENTIMETERS	F00 TO F99
7 METER + 00 TO 99 CENTIMETERS	G00 TO G99
8 METER + 00 TO 99 CENTIMETERS	H00 TO H99
9 METER + 00 TO 99 CENTIMETERS	J00 TO J99
10 METER + 00 TO 99 DECIMETERS	K00 TO K99
20 METER + 00 TO 99 DECIMETERS	L00 TO L99
30 METER + 00 TO 99 METERS	M00 TO M99
CABLE LENGTH ORDERING CODE EXAMPLES: 75CM=750, 6.3M=F30, 25M=L50, 80M=M50	

PIN ASSIGNMENT
T568B

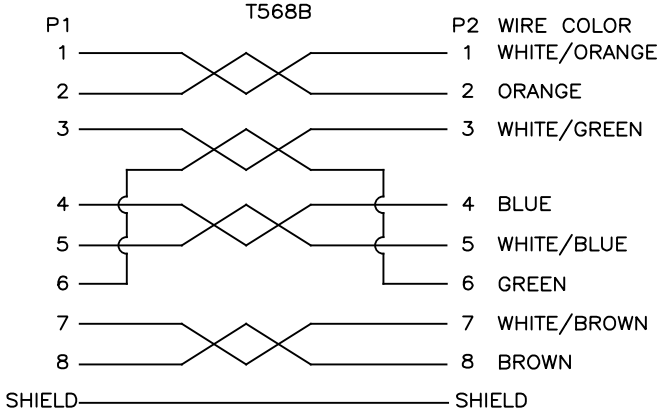

UNLESS SPECIFIED OTHERWISE	DRAWN JAMISON.C	JUL24/23	Amphenol Canada Corp. Commercial Products
PRIMARY UNITS MILLIMETERS	CHECKED K.TANG	JUL24/23	
SECONDARY	M.E. APP'D		RJ45 CAT5e F/UTP CABLE ASSEMBLY, ONE END STRAIGHT, OTHER END RIGHT ANGLE TYPE, OD 5.5MM, RoHS COMPLIANT
REFERENCE IN PARENTHESES	Q.A. APP'D		
GENERAL TOLERANCES FOR MM	DWG APP'D		DWG NO. P–RJE1Y–1XXXX95–AX01 REV D
1 DECIMAL PLACE ±2.0	ENG. REL. NO.		
2 DECIMAL PLACES	REF.		CODE ID NO. 03554 | DWG SIZE N/A | SCALE FIT | SHEET 1 OF 2
3 DECIMAL PLACES	THIRD ANGLE PROJECTION	DO NOT SCALE DRAWING	
AUGULAR DEGREE			

THIS DOCUMENT CONTAINS PROPRIETARY INFORMATION AND SUCH INFORMATION MAY NOT BE DISCLOSED TO OTHERS FOR ANY PURPOSE OR USED FOR MANUFACTURING PURPOSES WITHOUT WRITTEN PERMISSION FROM AMPHENOL CANADA CORP.

REVISIONS			
REV	DESCRIPTION, ECN, EAR NO.	DATE	APP'D
B	UPDATE NOTES TO CLARIFY PLUG SHIELD AND BOOT MATERIAL	OCT11/23	K.T
C	UPDATE 90 DEGREE PLUG APPEARANCE UPDATE BOOT TO OVERMOLD	DEC12/23	K.T
D	UPDATE 90 DEGREE PLUG APPEARANCE	JAN16/24	K.T

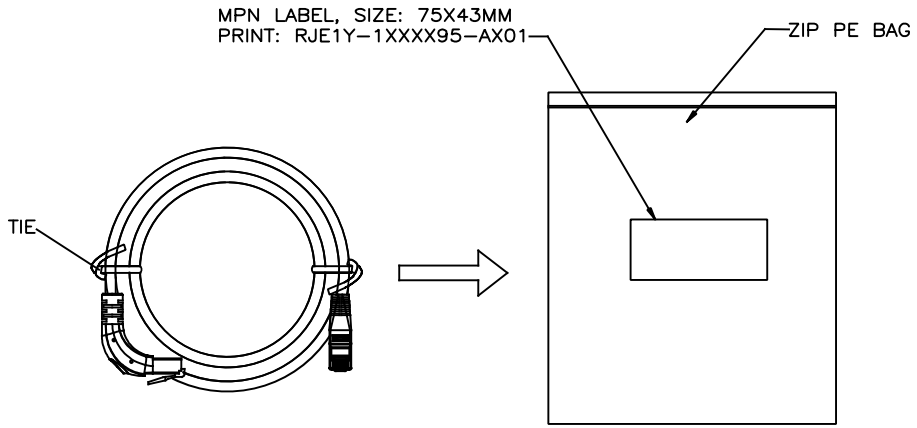

FIGURE 1

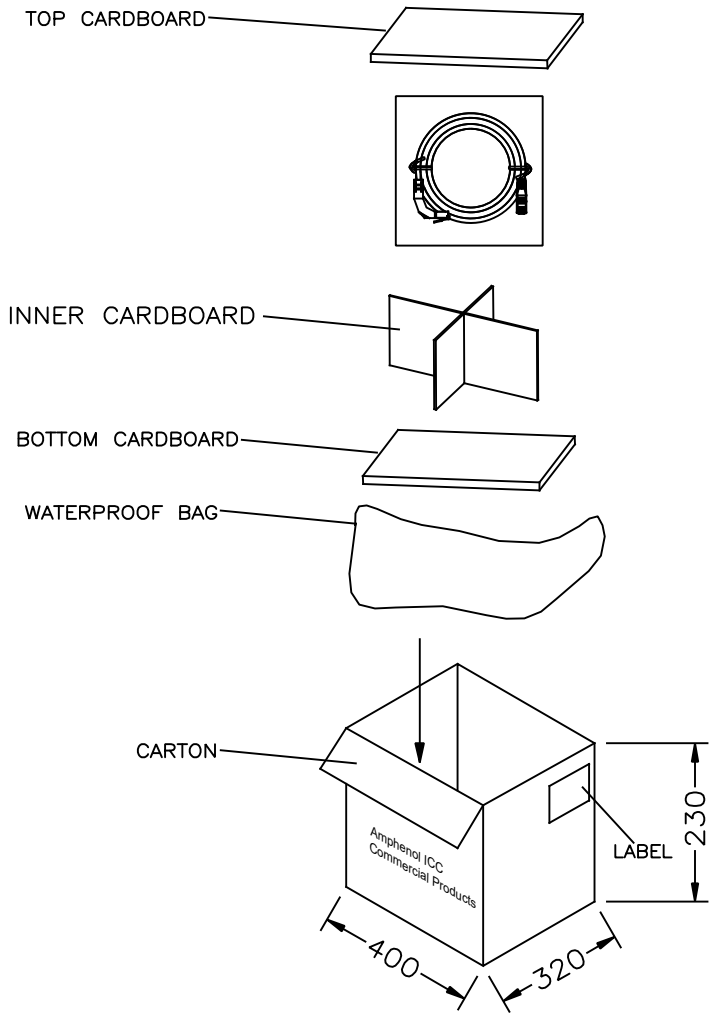

FIGURE 2
CARTON PACKAGING REFERENCE

NOTES:

1. PACKING CABLE WITH TWO TIES, THEN PUT IT INTO POLYBAG AND SEALING IT, EACH BAG CONTAINS ONE CABLE(FIGURE 1).
2. SEE FIGURE 2 FOR PACKING DETAILS, LOADING QUANTITY VARIANCE WITH DIFFERENT CABLE LENGTH.
3. CLOSE, SEAL AND MARK CARTON WITH PART NUMBER AND QUANTITY. ADD BAR CODE LABEL WHEN APPLICABLE.

THIS DOCUMENT CONTAINS PROPRIETARY INFORMATION AND SUCH INFORMATION MAY NOT BE DISCLOSED TO OTHERS FOR ANY PURPOSE OR USED FOR MANUFACTURING PURPOSES WITHOUT WRITTEN PERMISSION FROM AMPHENOL CANADA CORP.

UNLESS SPECIFIED OTHERWISE	DRAWN JAMISON.C	JUL24/23	Amphenol Canada Corp. Commercial Products
PRIMARY UNITS MILLIMETERS	CHECKED K.TANG	JUL24/23	
SECONDARY	M.E. APP'D		RJ45 CAT5e F/UTP CABLE ASSEMBLY, ONE END STRAIGHT, OTHER END RIGHT ANGLE TYPE, OD 5.5MM, RoHS COMPLIANT
REFERENCE IN PARENTHESES	Q.A. APP'D		
GENERAL TOLERANCES FOR MM	DWG APP'D		
1 DECIMAL PLACE ±2.0	ENG. REL. NO.		
2 DECIMAL PLACES	REF.		DWG NO. P-RJE1Y-1XXXX95-AX01 REV D
3 DECIMAL PLACES	THIRD ANGLE PROJECTION	DO NOT SCALE DRAWING	CODE ID NO. 03554 DWG SIZE N/A SCALE FIT SHEET 2 OF 2
AUGULAR DEGREE			