Data sheet

25Gmodul 270° Jack

P/N
130B12-25-E
EAN 4251394629100
2025/08/01
Version: J

Illustrations

Dimensional drawing

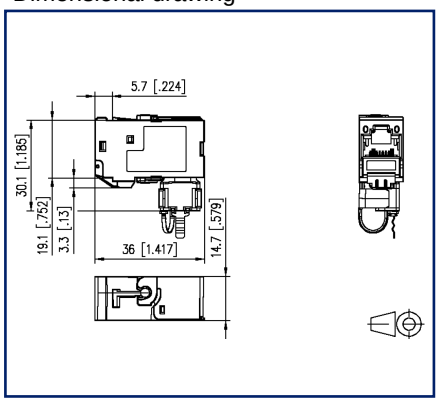

Cut-out

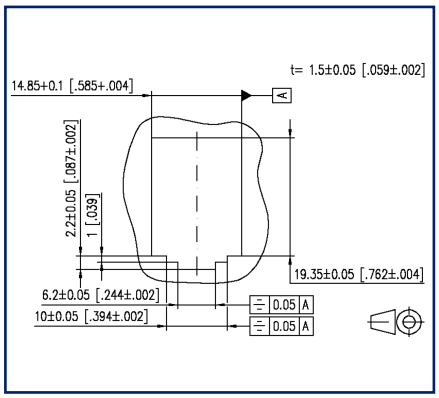

c UL US LISTED

See enlarged drawings at the end of document

Product specification

- certified by GHMT according to ISO/IEC TR-11801-9905 for 25GBASE-T in the Channel-Link with 30 m
- in preparation: ISO/IEC TR-11801-9909 for 25GBASE-T in channel link over 30 m
- completely downward compatible by complying with class E_A according to ISO/IEC 11801-1 and DIN EN 50173-1 (within the permanent link up to 90m, within the permanent link up to 100m)
- RJ45 according to IEC 60603-7-1, 2 mounting versions: module and keystone
- mounting without special tools, low mounting and connection time
- migrating 10G-systems without special tools
- connection of patch- and installations cords is possible for: AWG 26/7 - 22/7 and AWG 26/1 - 22/1
- suitable for 25GBit/s Ethernet (IEEE 802.3bq) and 10 GBit/s Ethernet (IEEE 802.3an), Remote Powering (PoE, PoE plus, UPoE and 4PPoE), HDBaseT, SAT-IP and AVoverIP
- solid, reusable module housing refined with zinc die-casting
- intelligent cable management in stuffer caps - also suitable for heavily twisted cables - also easy installation in various applications
- strain relief by latching clip directly on the stuffer cap
- 360°-shield connection
- dust protection cover (optional)

© 2025 METZ CONNECT - Technische Änderungen vorbehalten! Subject to modifications! Sous réserve de modifications techniques!

Data sheet
25Gmodul 270° Jack

P/N
130B12-25-E
EAN 4251394629100
2025/08/01
Version: J

Technical Data

General Data	
Fields of application	office areas
Mechanical measurement according to MICE	M1
Ingress measurement according to MICE	I1
Climatic measurement according to MICE	C1
Electromagnetic measurement according to MICE	E2
Design	Jack
Shielding	shielded
Transmission technology	Copper
Wiring	T568A, T568B
Color	metallike
Dimensions	
Dimension (L x W x H)	36 mm x 14.7 mm x 22.4 mm
Dimension (L x W x H)	1.417 in. x 0.579 in. x 0.882 in.
Modularity	yes
Field assembly ability	yes
Labeling option	on housing
Marking option	by latching clip

Transmission characteristics	
Class (ISO/IEC)	E_A
Remote Powering	yes
PoE	IEEE 802.3af
PoE plus	IEEE 802.3at
UPoE	yes
4PPoE	IEEE 802.3bt
HDBaseT	yes
Transmission rate up to 10 GBit	IEEE 802.3an

© 2025 METZ CONNECT - Technische Änderungen vorbehalten! Subject to modifications! Sous réserve de modifications techniques!

Data sheet
25Gmodul 270° Jack

P/N
130B12-25-E
EAN 4251394629100
2025/08/01
Version: J

Technical Data

Connections/interfaces	
Connector technology interface 1	IDC-connection
Connector technology interface 2	RJ45-jack
Number of ports interface 2	1
Number of ports interface 2 equipped	1
Number of positions/contacts interface 1	8
Number of positions/contacts interface 2	8P/8C
Termination data, solid wire (min. - max.)	
Conductor cross section, solid wire	AWG 26/1 - AWG 22/1
Conductor cross section, solid wire	0.128 mm² - 0.324 mm²
Conductor diameter, solid wire (bare copper)	0.409 mm - 0.643 mm
Conductor diameter, solid wire (bare copper)	0.016 in. - 0.025 in.
Termination data, stranded wire (min. - max.)	
Conductor cross section, stranded wire	AWG 26/7 - AWG 22/7
Conductor cross section, stranded wire	0.141 mm² - 0.355 mm²
Conductor diameter, stranded wire (bare copper)	0.483 mm - 0.762 mm
Conductor diameter, stranded wire (bare copper)	0.019 in. - 0.03 in.
Aderdurchmesser (min.-max.)	
Core diameter (conductor with insulation)	1 mm - 1.6 mm
Core diameter (conductor with insulation)	0.039 in. - 0.063 in.
Cable access/outlet	270°

Electrical characteristics	
Current carrying capacity	max. 1 A at 60 °C
Rated voltage	max. 60 V DC
Rated voltage UL	max. 56.5 V DC
Contact resistance	max. 20 mOhm
Through resistance	max. 200 mOhm
Insulation resistance	min. 500 MOhm
Dielectric strength conductor-conductor (secondary)	max. 1000 V DC

© 2025 METZ CONNECT - Technische Änderungen vorbehalten! Subject to modifications! Sous réserve de modifications techniques!

Data sheet

25Gmodul 270° Jack

P/N
130B12-25-E
EAN 4251394629100
2025/08/01
Version: J

Technical Data

Mechanical data	
Cut-out	MC module
Mounting method	snap-in function
Insertion and withdrawal force	max. 30 N
Position/mounting of latch standard installation position	top
strain relief	latching clip

Materials and material properties	
Material - Housing	GD-Zn
Material - Contact	Spring steel
Material - Contact finish	Au (gold)
Material - Shield	GD-Zn
Material - Stuffer cap	PA 6.6 UL94 V0
Material - Strain relief	PA 6.6 UL94 V0
Halogen free	yes
Material - Finish	Ni (nickel)
RoHS	compliant

Environmental conditions	
Rapid change of temperature	-40°C / -40°F - +70°C / 158°F / 25 cycles t=30 min

Approvals		
UL listed (file no.)	c UL US LISTED	DUXR.E178484

Standards/Regulations	
Connectors for electronic equipment	
Free and fixed connectors	IEC 60603-7-51
Connectors for electronic equipment - Tests and measurements	
Test standard for connectors (engaging and separating connectors under electrical load)	DIN-EN 60512-99-001, DIN-EN 60512-99-002
Endurance tests	IEC 60512-9-3: 03-2009

© 2025 METZ CONNECT - Technische Änderungen vorbehalten! Subject to modifications! Sous réserve de modifications techniques!

P/N
130B12-25-E
EAN 4251394629100
2025/08/01
Version: J

Technical Data

Standards/Regulations	
Interference proof	
Immunity for industrial environments	DIN EN 61000-6-2:2006-03
Emission proof	
Electromagnetic emission for residential, commercial and light-industrial environments	DIN EN 61000-6-3:2011-09
Climate tests	IEC 60512-11

Classifications	
ETIM 7.0	EC001121
ETIM 8.0	EC001121
ETIM 9.0	EC001121
ETIM 10.0	EC001121

Packing details	
Type of packaging	10 pc(s) / box

Application note

This product is a standard product of METZ CONNECT. METZ CONNECT is not aware of the specific intended use of the goods by the Customer or any customers of the Customer. The Customer guarantees that it has fully and sufficiently tested the use of the goods and any product modifications, product changes or product enhancements with regard to the specific intended use in accordance with the state of the art or in any other way. At METZ CONNECT's request, the Customer shall submit and make available meaningful evidence (e.g. test and laboratory protocols, certifications, etc.).

© 2025 METZ CONNECT - Technische Änderungen vorbehalten! Subject to modifications! Sous réserve de modifications techniques!

Accessories from

P/N	Designation
1309460003-I	Modul IP44SG surface mounted housing unequipped
1309461002-I	E-DAT modul IP44SG flush mounted housing pure white unequipped
1309461003-I	E-DAT modul IP44SG flush mounted housing gray unequipped
1309470002-I	IP44 surface-mounted module housing with hinged cover and lock, pure white, 2 port unequipped for MC module
1309470003-I	IP44 surface-mounted module housing with hinged cover and lock, gray, 2 port unequipped for MC module
1309471002-I	Flush-mounted module housing with hinged cover and lock, pure white, 2 port unequipped for MC module
1309471003-I	Flush-mounted module housing with hinged cover and lock, gray, 2 port unequipped for MC module

© 2025 METZ CONNECT - Technische Änderungen vorbehalten! Subject to modifications! Sous réserve de modifications techniques!

P/N
130B12-25-E
EAN 4251394629100
2025/08/01
Version: J

Illustrations

Dimensional drawing

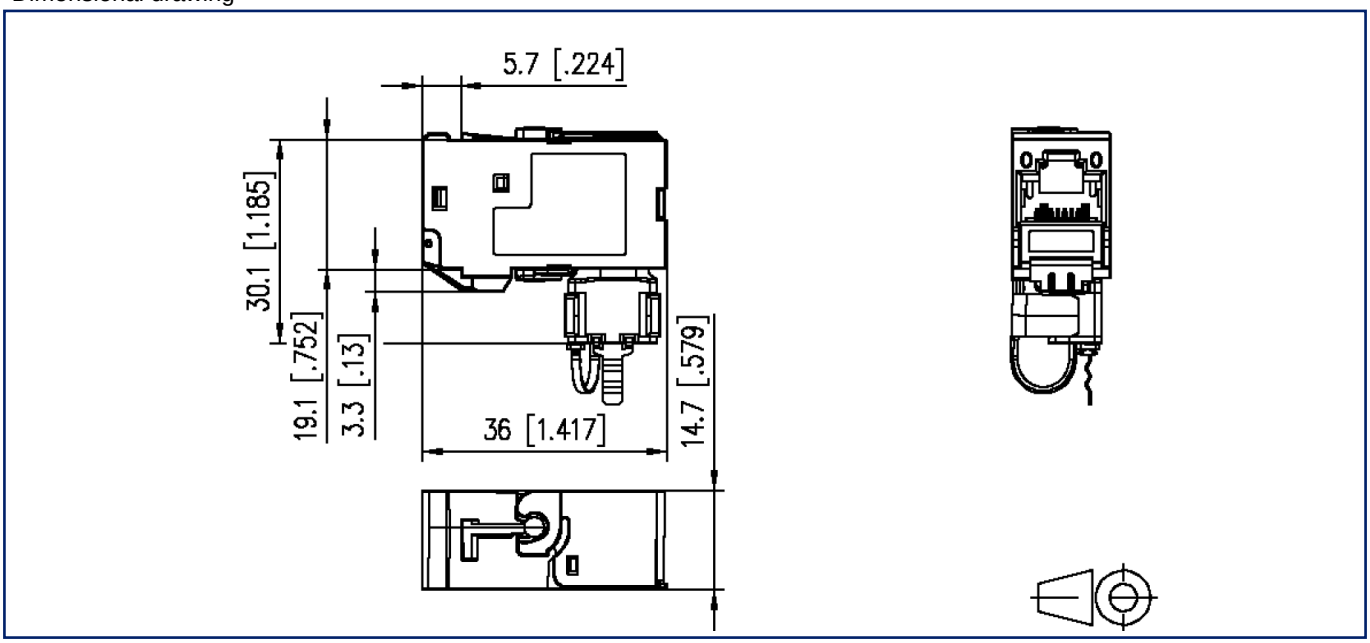

Cut-out

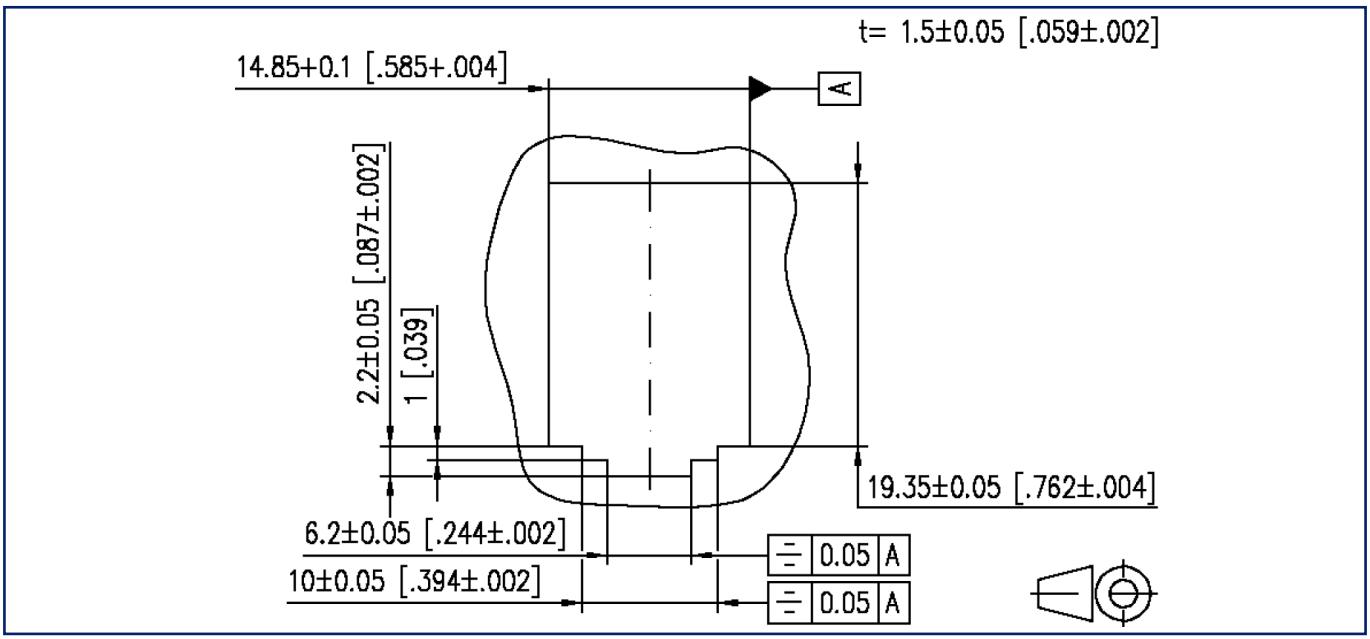

METZ CONNECT GmbH | Im Tal 2 | 78176 Blumberg | Germany
Phone +49 7702 533-0 | Fax +49 7702 533-433
Weitere Dokumentation siehe / additional documentation see / documentation supplémentaire voir www.metz-connect.com

© 2025 METZ CONNECT - Technische Änderungen vorbehalten! Subject to modifications! Sous réserve de modifications techniques!

P/N
130B12-25-E
EAN 4251394629100
2025/08/01
Version: J

Illustrations

Wiring diagram

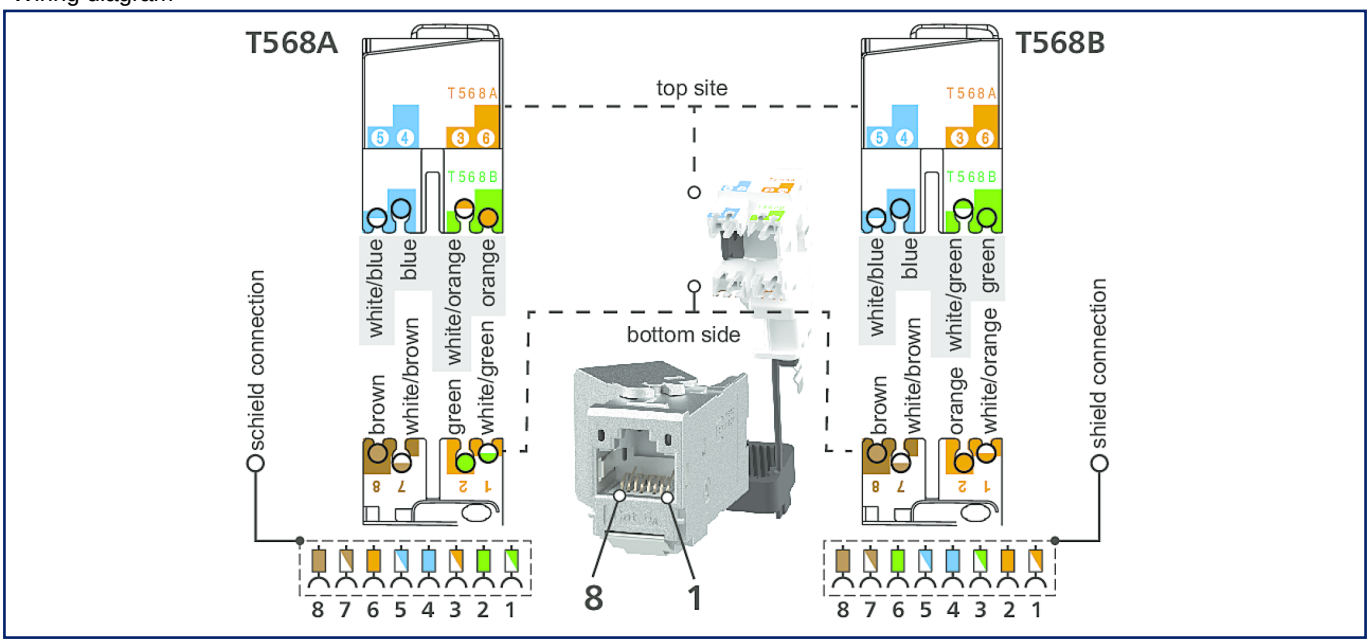

© 2025 METZ CONNECT - Technische Änderungen vorbehalten! Subject to modifications! Sous réserve de modifications techniques!