T591X337M010ATE025

T591, Tantalum, Polymer Tantalum, 330 uF, 20%, 10 VDC, SMD, Polymer, Molded, Low ESR, 25 mOhms, 7343, 4.3mm

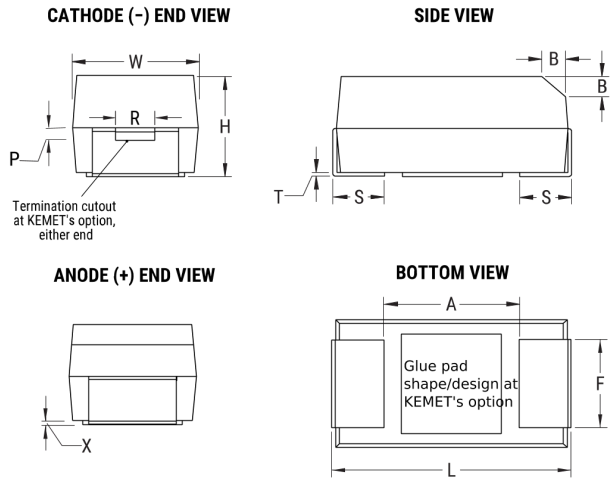

Click here for the 3D model.

General Information	
Series	T591
Dielectric	Polymer Tantalum
Style	SMD Chip
Description	SMD, Polymer, Molded, Low ESR
Features	Automotive
RoHS	Yes
Termination	Tin
Qualifications	AEC-Q200 (Limited 500 Hrs 85C/85% RH/Ur)
AEC-Q200	Subject to PPAP/PSW and change control
Typical Component Weight	554 mg
Shelf Life	52 Weeks
MSL	3

Dimensions	
Footprint	7343
L	7.3mm +/-0.3mm
W	4.3mm +/-0.3mm
H	4mm +/-0.3mm
T	0.13mm REF
S	1.3mm +/-0.3mm
F	2.4mm +/-0.1mm
A	3.8mm MIN
B	0.5mm +/-0.15mm
P	1.7mm REF
R	1mm REF
X	0.1mm +/-0.1mm

Specifications	
Capacitance	330 uF
Capacitance Tolerance	20%
Voltage DC	10 VDC (105C), 6.7 VDC (125C)
Temperature Range	-55/+125°C
Rated Temperature	105°C
Humidity	85C, 85% RH, load, 500 Hours
Dissipation Factor	10% 120Hz 25C
Failure Rate	N/A
ESR	25 mOhms (100kHz 25C)
Ripple Current	4470 mA (rms, 100kHz 45C), 3129 mA (rms, 105C), 1117.5 mA (rms, 125C)
Leakage Current	330 uA (5min 25°C)

Packaging Specifications	
Packaging	T&R, 178mm
Packaging Quantity	500

Statements of suitability for certain applications are based on our knowledge of typical operating conditions for such applications, but are not intended to constitute - and we specifically disclaim - any warranty concerning suitability for a specific customer application or use. This Information is intended for use only by customers who have the requisite experience and capability to determine the correct products for their application. Any technical advice inferred from this Information or otherwise provided by us with reference to the use of our products is given gratis, and we assume no obligation or liability for the advice given or results obtained.

© 2006 - 2024 KEMET