# PLT-SEC-T3-24-P-UT/PT - Type 3 surge protection plug

2907920

https://www.phoenixcontact.com/us/products/2907920

Please be informed that the data shown in this PDF document is generated from our online catalog. Please find the complete data in the user documentation. Our general terms of use for downloads are valid.



Replacement plug for type 3 surge protection from the PLT-SEC-…-UT/PT product series. Nominal voltage 24 V.

## Commercial data

| | |
|---|---|
| Item number | 2907920 |
| Packing unit | 10 pc |
| Minimum order quantity | 10 pc |
| Sales key | CL19 |
| Product key | CL14A4 |
| Catalog page | Page 82 (C-4-2019) |
| GTIN | 4055626257464 |
| Weight per piece (including packing) | 37.2 g |
| Weight per piece (excluding packing) | 33.825 g |
| Customs tariff number | 85363030 |
| Country of origin | DE |

## Technical data

### Product properties

| | |
|---|---|
| Product type | Replacement plug |
| Product family | SEC Family |
| IEC power supply system | TN-S |
| Type | Male |
| Number of positions | 2 |
| Surge protection fault message | optical |

Insulation characteristics

| | |
|---|---|
| Overvoltage category | III |
| Pollution degree | 2 |
| IEC test classification | III |
| | T3 |
| EN type | T3 |
| Number of ports | One |

### Connection data

| | |
|---|---|
| Connection method | pluggable |

### Dimensions

| | |
|---|---|
| Dimensional drawing | 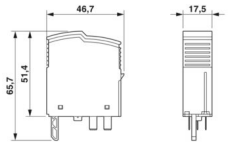  |
| Width | 17.5 mm |
| Height | 46.7 mm |
| Depth | 65.7 mm |
| Horizontal pitch | 1 Div. |

### Material specifications

| | |
|---|---|
| Color | light grey (RAL 7035) |
| | gray (RAL 7042) |
| Flammability rating according to UL 94 | V-0 |
| CTI value of material | 600 |
| Insulating material | PA 6.6-FR 20 % GF |
| | PA 6.6-FR |
| Housing material | PA 6.6-FR 20 % GF |
| | PA 6.6-FR |

### Protective circuit

| | |
|---|---|
| | L-N |

| | |
|---|---|
| Mode of protection | L-PE |
| | N-PE |
| Direction of action | 1L-N & N-PE |
| Nominal voltage $U_N$ | 24 V AC (TN-S) |
| Nominal frequency $f_N$ | 50 Hz (60 Hz) |
| Maximum continuous voltage $U_C$ | 34 V AC |
| Residual current $I_{PE}$ | ≤ 5 µA |
| Standby power consumption $P_C$ | ≤ 2.70 mVA (at $U_{REF}$) |
| | ≤ 4.80 mVA (at $U_C$) |
| Reference test voltage $U_{REF}$ | 27.00 V AC |
| Nominal discharge current $I_n$ (8/20) µs | 1 kA |
| Combination wave $U_{OC}$ | 2 kV |
| Voltage protection level $U_p$ (L-N) | ≤ 0.2 kV |
| Voltage protection level $U_p$ (L-PE) | ≤ 0.6 kV |
| Voltage protection level $U_p$ (N-PE) | ≤ 0.6 kV |
| TOV behavior at $U_T$ (L-N) | 50 V AC (120 min / safe failure mode) |
| TOV behavior at $U_T$ (L-PE) | 50 V AC (120 min / withstand mode) |
| Response time $t_A$ (L-N) | ≤ 25 ns |
| Response time $t_A$ (L-PE) | ≤ 100 ns |
| Response time $t_A$ (N-PE) | ≤ 100 ns |
| Short-circuit current rating $I_{SCCR}$ | 10 kA AC |
| Max. backup fuse with branch wiring | 32 A (gG / B / C) |

Additional technical data

| | |
|---|---|
| Short-circuit current rating $I_{SCCR}$ | 0.25 kA DC (Without additional backup fuse in the DC branch wiring) |
| | 5 kA DC (for 20 A gG / B backup fuse) |
| Maximum discharge current $I_{max}$ (8/20) µs | 4 kA |
| Nominal discharge current $I_n$ (8/20) µs | 3 kA |
| Residual voltage $U_{res}$ (L-N) | ≤ 0.16 kV (at 0.5 kA) |
| | ≤ 0.2 kV (at 1 kA) |
| Residual voltage $U_{res}$ (L-PE) | ≤ 0.35 kV (at 0.5 kA) |
| | ≤ 0.4 kV (at 1 kA) |
| Residual voltage $U_{res}$ (N-PE) | ≤ 0.35 kV (at 0.5 kA) |
| | ≤ 0.4 kV (at 1 kA) |
| Maximum continuous voltage $U_C$ | 44 V DC |
| Mode of protection | (DC+) - (DC-) |
| | (DC+/DC-) - PE |

## Environmental and real-life conditions

Ambient conditions

| | |
|---|---|
| Degree of protection | IP20 |
| Ambient temperature (operation) | -40 °C ... 80 °C |
| Ambient temperature (storage/transport) | -40 °C ... 80 °C |

| | |
|---|---|
| Altitude | ≤ 6000 m (amsl) |
| Permissible humidity (operation) | 5 % ... 95 % |
| Shock (operation) | 30g (Half-sine / 11 ms / 3x ±X, ±Y, ±Z) |
| Vibration (operation) | 5g (5 ... 500 Hz / 2.5 h / X, Y, Z) |

## Approvals

UL specifications

| | |
|---|---|
| Maximum continuous operating voltage MCOV | 34 V AC |
| | 34 V DC |
| Nominal discharge current $I_n$ | 1 kA |
| Mode of protection | L-N |
| | L-G |
| | N-G |
| | (DC+) - (DC-) |
| | (DC+) - G |
| | (DC-) - G |
| Nominal voltage | 34 V DC |
| Power distribution system | Single phase |
| | DC |
| Nominal frequency | 50/60 Hz |
| Measured limiting voltage MLV (L-N) | 200 V |
| Measured limiting voltage MLV (L-G) | 510 V |
| Measured limiting voltage MLV (N-G) | 510 V |
| SPD Type | 4CA |

## Standards and regulations

| | |
|---|---|
| Standards/specifications | IEC 61643-11 |
| Note | 2011 |

EN 61643-11

| | |
|---|---|
| Standards/specifications | EN 61643-11 |
| Note | 2012 |

## Mounting

| | |
|---|---|
| Mounting type | on base element |

## Drawings

Circuit diagram

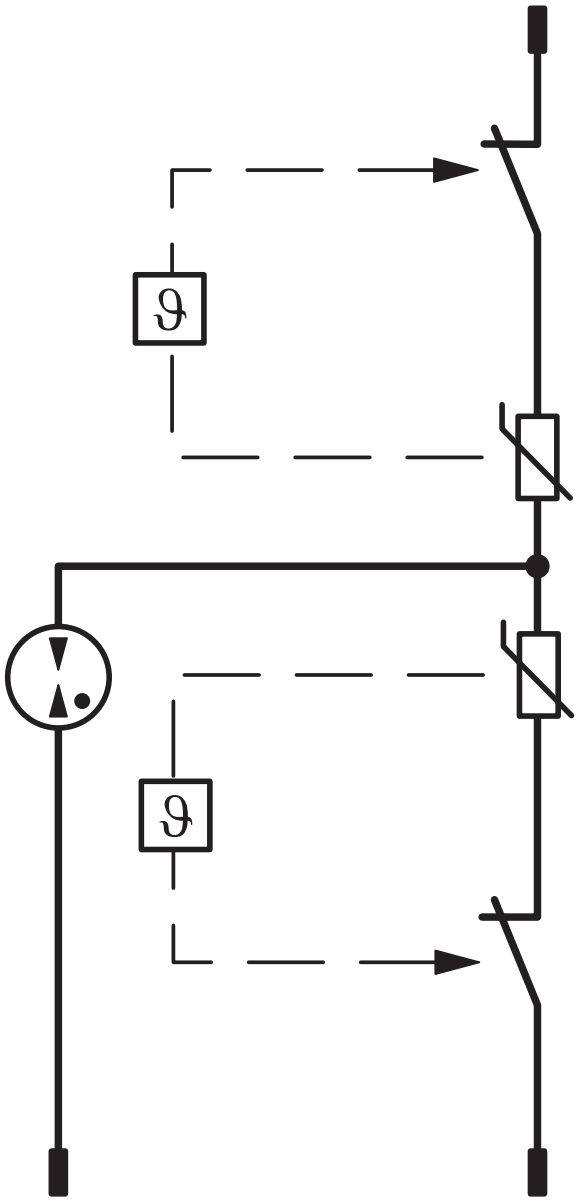

Dimensional drawing

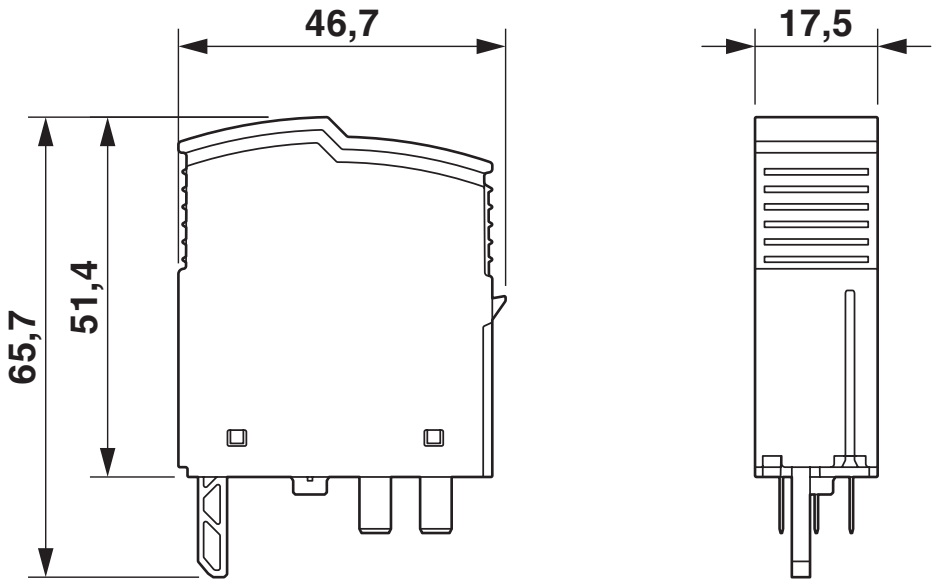

## Approvals

To download certificates, visit the product detail page: https://www.phoenixcontact.com/us/products/2907920

**cUL Recognized**
Approval ID: FILE E 330181

**UL Recognized**
Approval ID: FILE E 330181

**IECEE CB Scheme**
Approval ID: NL-51083

**EAC**
Approval ID: RU C-DE.*09.B.00169

**CCA**
Approval ID: NTR-NL 7676

**KEMA-KEUR**
Approval ID: 71-103027

**UAE-RoHS**
Approval ID: 23-10-88891

**DNV**
Approval ID: TAE00002U7

**cUL Recognized**
Approval ID: FILE E 340736

**UL Recognized**
Approval ID: FILE E 340736

**cULus Recognized**

cULus Recognized

## Classifications

### ECLASS

| | |
|---|---|
| ECLASS-11.0 | 27130890 |
| ECLASS-13.0 | 27171292 |

### ETIM

| | |
|---|---|
| ETIM 8.0 | EC002496 |

### UNSPSC

| | |
|---|---|
| UNSPSC 21.0 | 39121600 |

## Environmental product compliance

EU RoHS

| | |
|---|---|
| Fulfills EU RoHS substance requirements | Yes, No exemptions |

China RoHS

| | |
|---|---|
| Environment friendly use period (EFUP) | EFUP-E |
| | No hazardous substances above the limits |

EU REACH SVHC

| | |
|---|---|
| REACH candidate substance (CAS No.) | No substance above 0.1 wt% |

## Accessories

### PLT-SEC-T3-24-FM-PT - Type 3 surge protection device

2907925

https://www.phoenixcontact.com/us/products/2907925



Type 3 surge protection, consisting of protective plug and base element, with integrated status indicator and remote signaling for single-phase power supply networks. Nominal voltage: 24 V AC/DC

### PLT-SEC-T3-24-FM-UT - Type 3 surge protection device

2907916

https://www.phoenixcontact.com/us/products/2907916



Type 3 surge protection, consisting of protective plug and base element, with integrated status indicator and remote signaling for single-phase power supply networks. Nominal voltage: 24 V AC/DC

# PLT-SEC-T3-24-P-UT/PT - Type 3 surge protection plug

2907920

https://www.phoenixcontact.com/us/products/2907920

## PLT-SEC-T3-BE-FM-PT - Type 3 surge protection base element

2907929

https://www.phoenixcontact.com/us/products/2907929



Base element for protective plugs from the PLT-SEC-...-UT/PT product series with remote indication contact.

## PLT-SEC-T3-BE-FM-UT - Type 3 surge protection base element

2907924

https://www.phoenixcontact.com/us/products/2907924

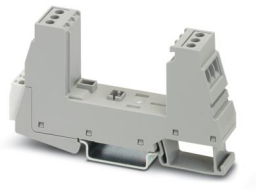

Base element for protective plugs from the PLT-SEC-...-UT/PT product series with remote indication contact.

Phoenix Contact 2024 © - all rights reserved
https://www.phoenixcontact.com

Phoenix Contact USA
586 Fulling Mill Road
Middletown, PA 17057, United States
(+717) 944-1300
info@phoenixcon.com