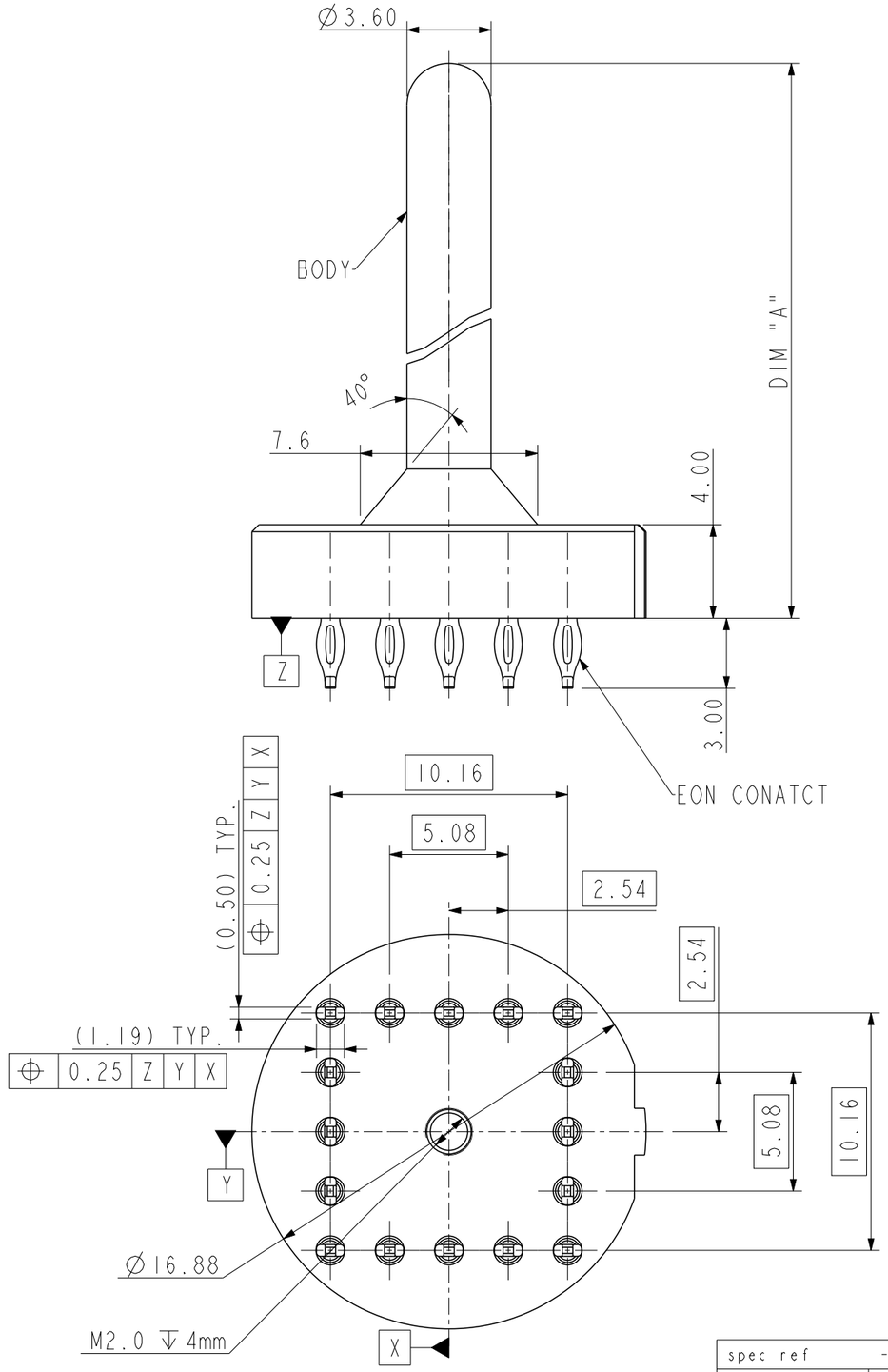

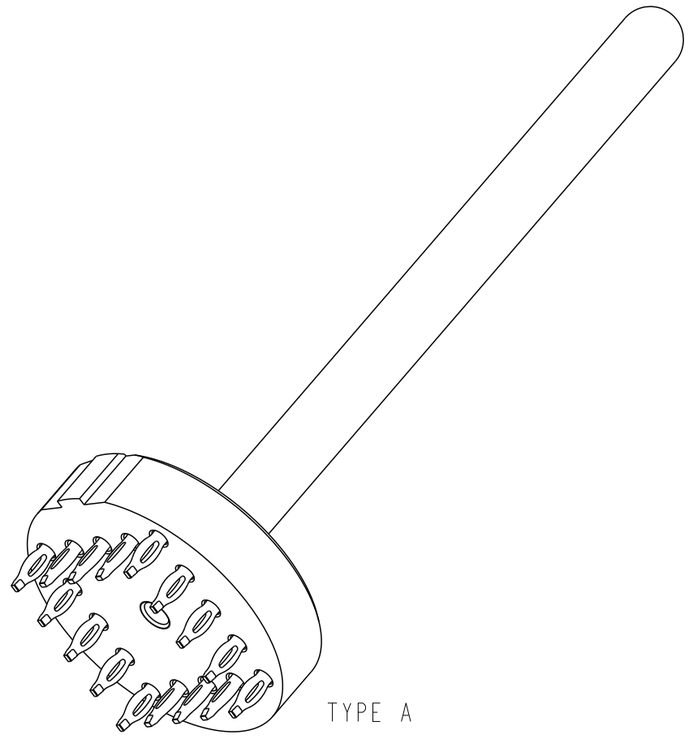

PRODUCT NUMBER CODE:
10140847-36 X XXXX LF

- LF: LEAD FREE
- XXXX: DIM "A",(EXAMPLE "3010": DIM "A"=30.10MM)
- X: TYPE OPTION
  - 0: TYPE A
  - 1: TYPE B
- 36: MATING OD:3.6MM

PRODUCT NUMBER	DIM "A"	TYPE
10140847-3601LF (SPECIAL NUMBER)	49.10	A
10140847-3602210LF	22.10	
10140847-3601800LF	18.00	

spec ref	-			dr	Li-Qing Lei	2017/03/16	projection
tolerance std ASME Y14.5M	TOLERANCES UNLESS OTHERWISE SPECIFIED			eng	Li-Qing Lei	2018/12/18	mm
				chr	-	-	size A3 / scale 4:1
				appr	Tim Yao	2019/01/31	ecn no ELX-N-32205-1
surface - ASME Y14.5M	linear	0.X	±0.30				product family - / rel level Released
		0.XX	±0.20				
		0.XXX	±0.10				
	angular	0°	±2°				

Amphenol FCi

title: 3.6mm Plug
SheerPwr Circular Vertical type

dwg no: 10140847-36

rev: C

cat. no. - | Product - Customer Drw | sheet 1 of 3

© 2016 AFCI

PRODUCT NUMBER	DIM "A"	TYPE
10140847-3611LF (SPECIAL NUMBER)	71.6	B

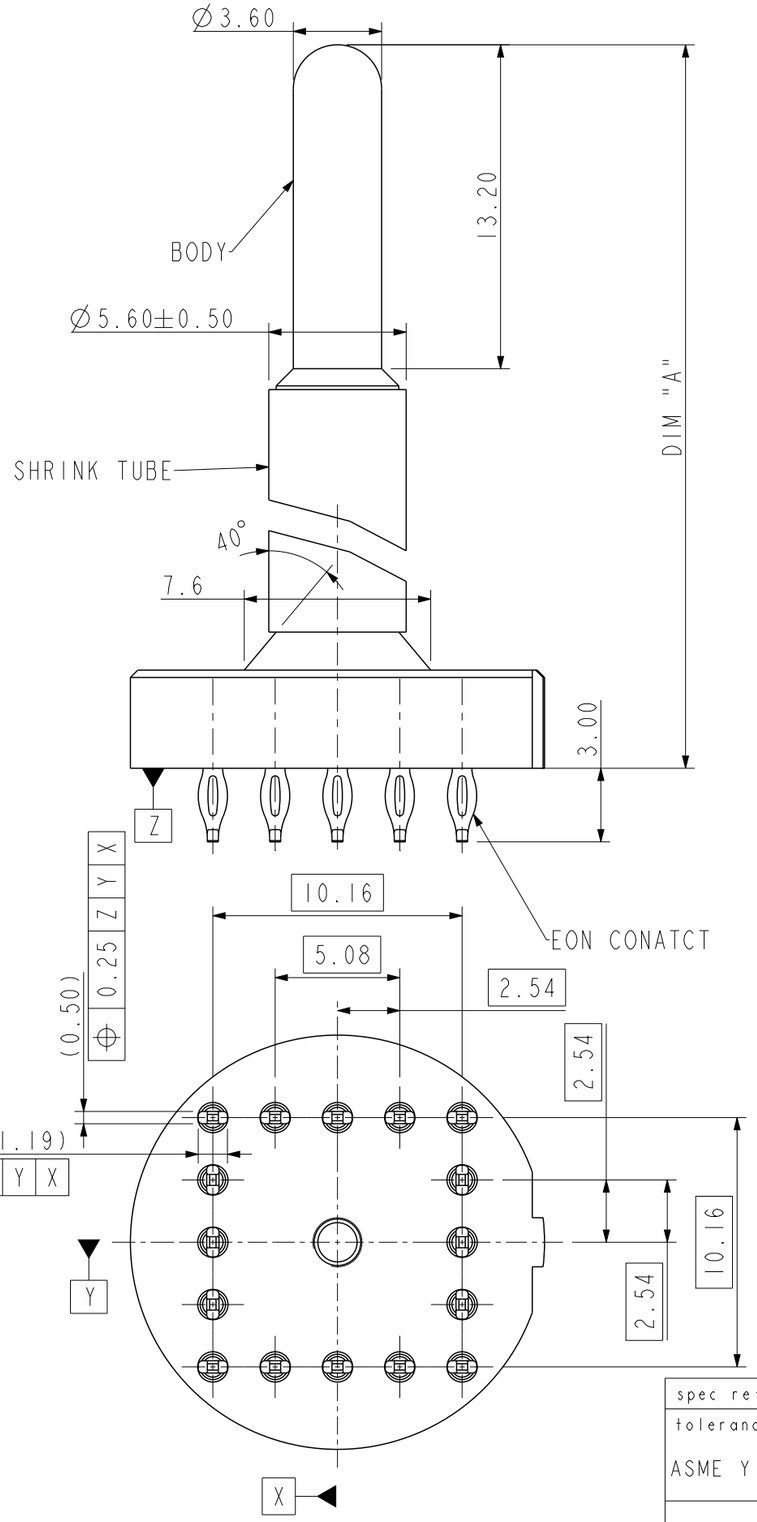

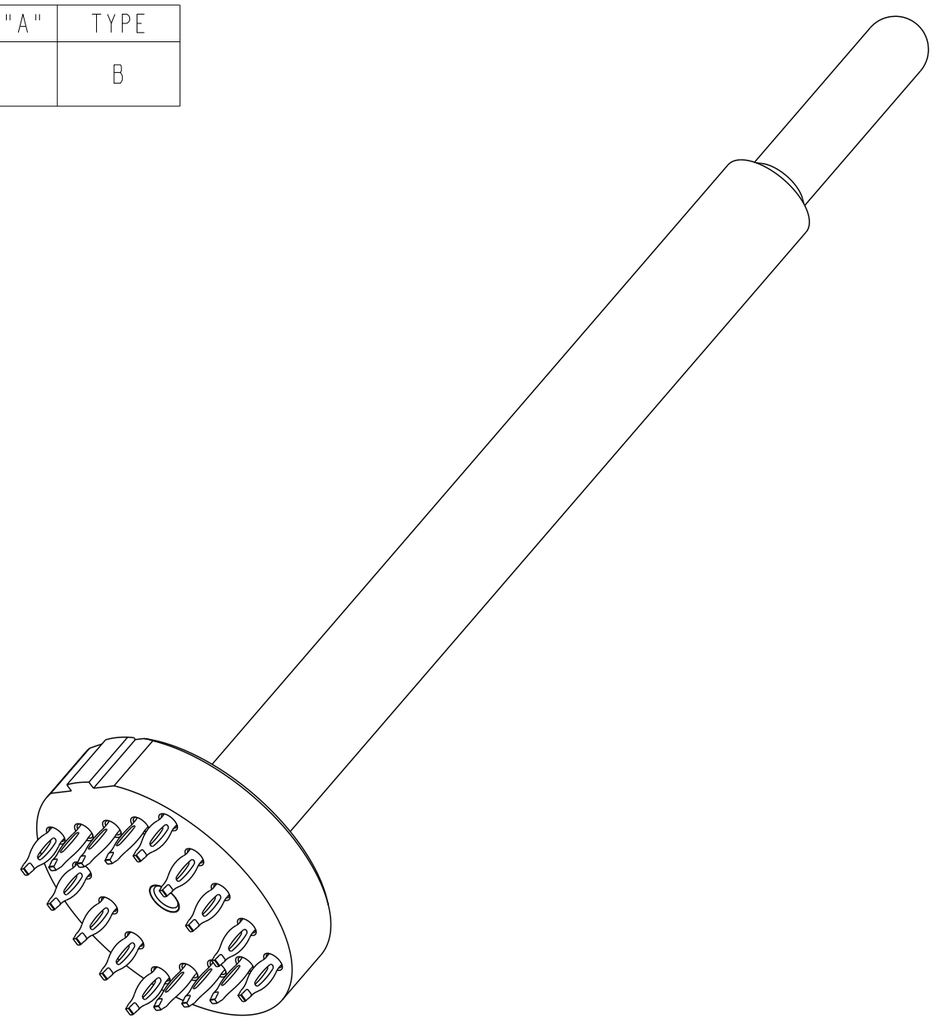

TYPE B

spec ref	-	dr	Li-Qing Lei	2017/03/16	projection	mm	size A3 / scale 4:1
tolerance std ASME Y14.5M	TOLERANCES UNLESS OTHERWISE SPECIFIED	eng	Li-Qing Lei	2018/12/18			
		chr	-	-			ecn no ELX-N-32205-1
		appr	Tim Yao	2019/01/31	product family -		rel level Released
surface - ASME Y14.5M	linear 0.X ±0.30 / 0.XX ±0.20 / 0.XXX ±0.10	Amphenol FCi	title: 3.6mm Plug SheerPwr Circular Vertical type			dwg no 10140847-36	rev C
	angular 0° ±2°		cat. no. -	Product - Customer Drw			sheet 2 of 3

© 2016 AFCI

Creo File - REV E - 2016-02-12

PDS: Rev :C

STATUS:Released

Printed: Jan 31, 2019

NOTES:

1. MATERIAL:
   1.1 EON CONATCT: COPPER ALLOY;
   1.2 BODY: ZN ALLOY;
   1.3 SHRINK TUBE:PLASTIC (FOR TYPE B).

2. PLATING:
   2.1 EON CONTACT: 2.54μm SN OVER 1.27μm NI;
   2.2 BODY: 2.54μm AG OVER 1.27μm NI.

3. ALL HOLE DIAMETERS ARE FINISHED HOLE SIZES.

4. 1.15±0.025mm DRILLLED HOLD PLATED WITH 7.62μm MIN SN OVER
   25.4μm Cu PLATING TO ACHIEVE A1.02±0.075mm FINISHED HOLE.

5. PRODUCT SPECIFICATION - REFER TO FCI GS-12-1316 ;
   APPLICATION SPECIFICATION - REFER TO FCI GS-20-0540;
   PRODUCT PACKAGE IN TRAYS.

6. MIN PCB THICKNESS= 1.5mm;

7. THE PRODUCT MEET EUROPEAN UNION DIRECTIONS AND OTHER COUNTRY REGULATION
   AS DESCRIBED IN GS-22-008.

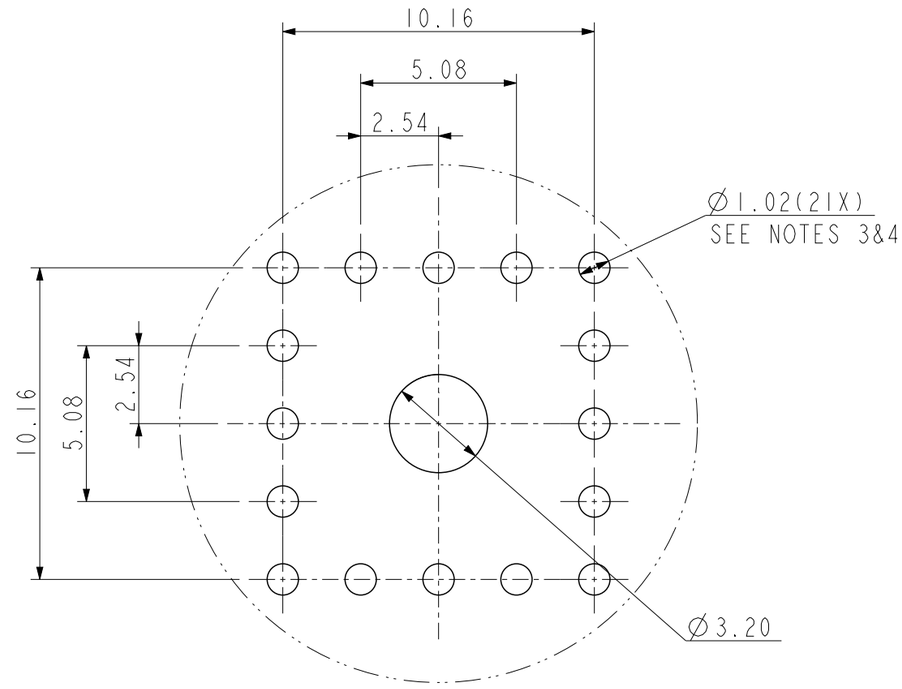

RECOMMENDED PC BOARD LAYOUT
TOLERANCE:±0.05

© 2016 AFCI

spec ref -				dr	Li-Qing Lei	2017/03/16	projection	mm	size A3 / scale 4:1
tolerance std ASME Y14.5M	TOLERANCES UNLESS OTHERWISE SPECIFIED			eng	Li-Qing Lei	2018/12/18			ecn no ELX-N-32205-1
				chr	-	-			
				appr	Tim Yao	2019/01/31	product family -		rel level Released
surface - ASME Y14.5M	linear	0.X	±0.30	Amphenol FCi	title	3.6mm Plug SheerPwr Circular Vertical type		dwg no 10140847-36	rev C
		0.XX	±0.20						
		0.XXX	±0.10						
	angular	0°	±2°		cat. no. -		Product - Customer Drw		sheet 3 of 3