RoHS compliant
by exemption

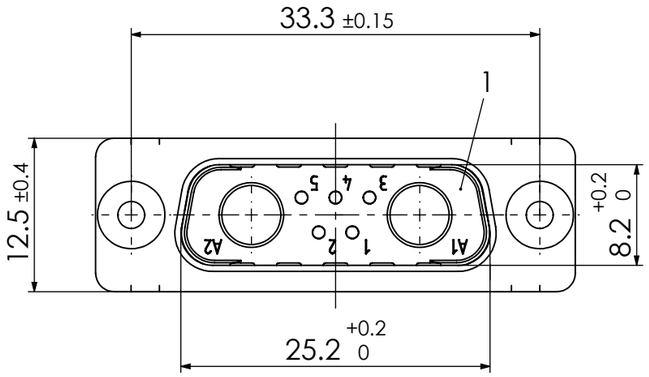

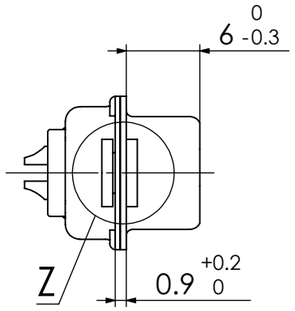

Z(5:1)
Float mount

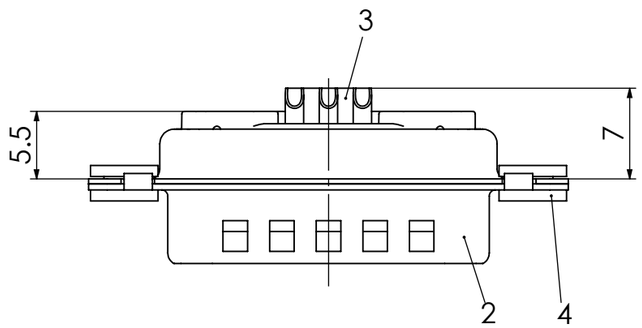

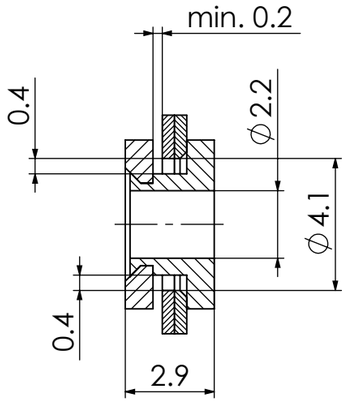

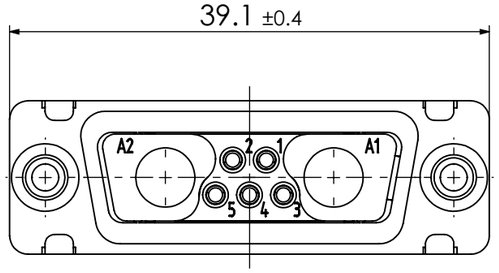

No.	St.	Part	Type Description/Material	Surface plating/Colour/Class
4	2	Float mount	Stainless steel	blank
3	5	Signal contact	P0 / Brass	0.8µm Au / AWG 20
2	1	Shell	Steel	tin plated
1	1	Insulator	PBT (-55°C to +130°C) acc. UL94V-0	green

FUNCTIONAL SYMBOLS
= 0
= 0
= 0

THIS DRAWING CONTAINS INFORMATION THAT IS PROPRIETARY TO MOLEX ELECTRONIC TECHNOLOGIES, LLC AND SHOULD NOT BE USED WITHOUT WRITTEN PERMISSION

DIMENSION UNITS: mm
SCALE: 2:1
MEASUREMENTS WITHOUT TOLERANCE ACC. TO: ISO 2768-m

REV.	CH.-NO.
2	24410
1	

CURRENT REVISION
DRWN: DRAWN BY msteinbrueck 12-09-2023
APPR: APPR BY mteubel 15-09-2023

INITIAL REVISION
DRWN: DRAWN BY sschref 09-12-2003
APPR: APPR BY aschiekofer 11-12-2003

REPLACEMENT FOR: 1731070741_Rev. A1
FRIST ANGLE PROJECTION
DRAWING: A3-SIZE

molex

FCT D-Sub Mixed-Layout Connector

PRODUCT CUSTOMER DRAWING

MATERIAL NUMBER: 1731070741
REVISION: 2
DOCUMENT NUMBER: FMW7W2P-K120
CUSTOMER: GENERAL MARKET
SHEET NUMBER: 1 OF 1

COMMENT:
ALL RIGHTS ARE RESERVED BY US FOR THIS DRAWING, WITHOUT OUR PRIOR CONSENT,
IT MAY NEITHER BE DUBLICATED NOR MADE AVAILABLE TO A THIRD PARTY,
AND IT ALSO MAY NOT BE IMPROPERLY USED BY TE RECEIVER, OR A THIRD PARTY.