# 2-2170808-4 ✔ ACTIVE

zQSFP+/QSFP28

TE Internal #: 2-2170808-4

QSFP28/56, Cage Assembly, Signal, Operating Temperature Range -40 - 85 °C [-40 - 185 °F], Data Rate (Max) 28 Gb/s, 2 Ports

View on TE.com >

Connectors > Pluggable IO Connectors & Cages



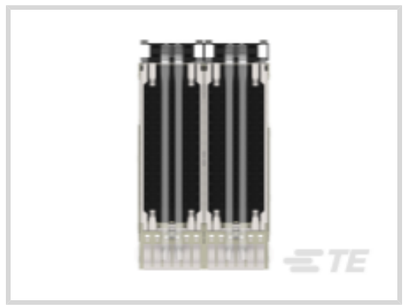

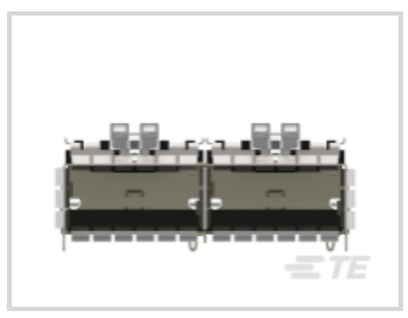

Pluggable I/O Product Type: **Cage Assembly**

Sealable: **No**

Circuit Application: **Signal**

Operating Temperature Range: **-40 - 85 °C [ -40 - 185 °F ]**

Data Rate (Max): **28 Gb/s**

## Features

### Product Type Features

| | |
|---|---|
| Thermal Accessory Type Included | Heat Sink |
| Cage Type | Ganged |
| Pluggable I/O Product Type | Cage Assembly |
| Sealable | No |
| Form Factor | QSFP28/56 |

### Configuration Features

| | |
|---|---|
| Number of Rear EONs per Port Column | 0 |
| Number of Ports | 2 |
| Port Matrix Configuration | 1 x 2 |

### Electrical Characteristics

| | |
|---|---|
| Data Rate (Max) | 28 Gb/s |

### Body Features

| | |
|---|---|
| Heat Sink Finish | Anodized Black |
| Heat Sink Height | 4.2 mm[.165 in] |

| | |
|---|---|
| Heat Sink Height Class | PCI |
| Heat Sink Style | Pin |

### Contact Features

| | |
|---|---|
| PCB Contact Termination Area Plating Material | Tin |

### Termination Features

| | |
|---|---|
| Termination Post & Tail Length | 2.05 mm[.081 in] |
| Termination Method to Printed Circuit Board | Through Hole - Press-Fit |

### Housing Features

| | |
|---|---|
| Cage Material | Nickel Silver |

### Dimensions

| | |
|---|---|
| PCB Thickness (Recommended) | 1.57 mm[.062 in] |

### Usage Conditions

| | |
|---|---|
| Operating Temperature Range | -40 - 85 °C[-40 - 185 °F] |

### Operation/Application

| | |
|---|---|
| Pluggable I/O Applications | SFP+ Stacked Belly-to-Belly |
| Circuit Application | Signal |

### Industry Standards

| | |
|---|---|
| UL Flammability Rating | UL 94V-0 |

### Packaging Features

| | |
|---|---|
| Packaging Method | Box & Tray |

### Other

| | |
|---|---|
| Included Lightpipe | Yes |
| EMI Containment Feature Type | Internal/External EMI Springs |

## Product Compliance

For compliance documentation, visit the product page on TE.com>

| | |
|---|---|
| EU RoHS Directive 2011/65/EU | Compliant |
| EU ELV Directive 2000/53/EC | Compliant |
| China RoHS 2 Directive MIIT Order No 32, 2016 | No Restricted Materials Above Threshold |
| EU REACH Regulation (EC) No. 1907/2006 | Current ECHA Candidate List: JAN 2024 (240) |

| | |
|---|---|
| | Candidate List Declared Against: JAN 2024 (240)<br>Does not contain REACH SVHC |
| Halogen Content | Not Low Halogen - contains Br or Cl > 900 ppm. |
| Solder Process Capability | Not applicable for solder process capability |

Product Compliance Disclaimer

This information is provided based on reasonable inquiry of our suppliers and represents our current actual knowledge based on the information they provided. This information is subject to change. The part numbers that TE has identified as EU RoHS compliant have a maximum concentration of 0.1% by weight in homogenous materials for lead, hexavalent chromium, mercury, PBB, PBDE, DBP, BBP, DEHP, DIBP, and 0.01% for cadmium, or qualify for an exemption to these limits as defined in the Annexes of Directive 2011/65/EU (RoHS2). Finished electrical and electronic equipment products will be CE marked as required by Directive 2011/65/EU. Components may not be CE marked. Additionally, the part numbers that TE has identified as EU ELV compliant have a maximum concentration of 0.1% by weight in homogenous materials for lead, hexavalent chromium, and mercury, and 0.01% for cadmium, or qualify for an exemption to these limits as defined in the Annexes of Directive 2000/53/EC (ELV). Regarding the REACH Regulation, the information TE provides on SVHC in articles for this part number is based on the latest European Chemicals Agency (ECHA) 'Guidance on requirements for substances in articles' posted at this URL: https://echa.europa.eu/guidance-documents/guidance-on-reach

## Compatible Parts



TE Part # CAT-C11-Z806726
QSFP28 to QSFP28 Cable Assembly: 30 AWG



TE Part # CAT-C11-N49
QSFP28-Two QSFP28 Cable Assembly: 30 AWG



TE Part # CAT-C11-Z8
QSFP28 to QSFP28 Cable Assembly: 26 AWG



TE Part # CAT-C11-N490333
QSFP28-Four SFP+ Cable Assembly: 30 AWG



TE Part # CAT-C11-N490325
QSFP28-Four SFP+ Cable Assembly: 26 AWG



TE Part # CAT-Q17-N490325
QSFP56 to QSFP56 Cable Assembly: 30 AWG



TE Part # CAT-Q17-N49033
QSFP56-Two QSFP56 Cable Assembly: 30 AWG



TE Part # CAT-C11-Q17
QSFP56 to QSFP56 Cable Assembly: 26 AWG



TE Part # CAT-Q17-N49011
QSFP56-Four SFP56 Cable Assembly: 30 AWG



TE Part # CAT-Q17-N490333
QSFP56-Four SFP56 Cable Assembly: 26 AWG

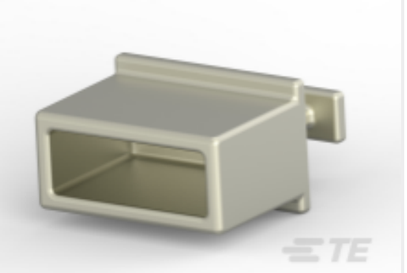

TE Part # 1888810-2
EMI/Dust Cover,XFP And QSFP



TE Part # 1551920-2
zQSFP+ connector assembly

TE Part # 5-2215048-0
ASSY, SEATING TL, QSFP28, 1X2

## Also in the Series | zQSFP+/QSFP28

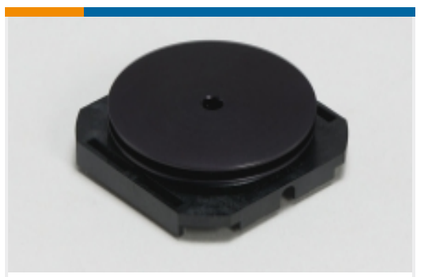

Heat Sinks(7)



Pluggable I/O Cable Assemblies(78)



Pluggable IO Connectors & Cages(424)

## Customers Also Bought



TE Part # 2174803-2
PUSH-PUSH MICRO SIM CONNECTOR



TE Part # 4-2170808-5
QSFP28, 1X2, CAGE ASSY, SPRING, HS, LP



TE Part # ZPF0000000000015209
DMC-M 04-12 SN



TE Part # ZPF0000000000015203
DMC-M 04-12 PN

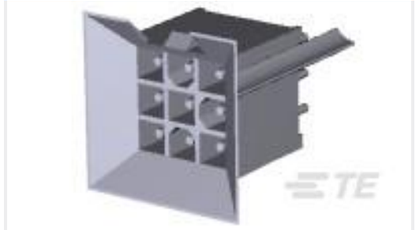

TE Part # 1-794130-1
09P MINI UMNL HDR ASSY BLMT LF

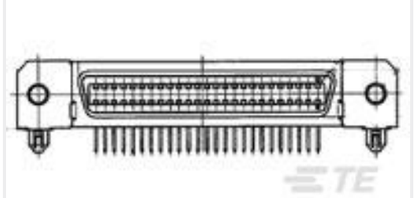

TE Part # 316998-7
CHAMP.050 REC HDR ASS'Y FMS TY



TE Part # NB14444001
VERSAFIT-3/4-9-FSP



TE Part # 1-5536504-4
2MM FB,ASY,192,SIG,HDR,EN,6.50, W/O Lube

TE Part # ZPF0000000000003665
732-0596-22

TE Part # ZPF0000000000003790
732-8219-01 A1064

## Documents

### CAD Files

3D PDF

3D

Customer View Model

ENG_CVM_CVM_2-2170808-4_A.2d_dxf.zip

English

Customer View Model

ENG_CVM_CVM_2-2170808-4_A.3d_igs.zip

English

Customer View Model

ENG_CVM_CVM_2-2170808-4_A.3d_stp.zip

English

By downloading the CAD file I accept and agree to the **Terms and Conditions** of use.

### Product Specifications

Product Specification

English