Data sheet



DFS60B-S1UA01662

DFS60

INCREMENTAL ENCODERS

SICK
Sensor Intelligence.



Illustration may differ

Ordering information

Type	part no.
DFS60B-S1UA01662	1059004

Other models and accessories ➜ www.sick.com/DFS60

Detailed technical data

Safety-related parameters

$MTTF_D$ (mean time to dangerous failure)	300 years (EN ISO 13849-1) [1]

[1] This product is a standard product and does not constitute a safety component as defined in the Machinery Directive. Calculation based on nominal load of components, average ambient temperature 40 °C, frequency of use 8760 h/a. All electronic failures are considered hazardous. For more information, see document no. 8015532.

Performance

Pulses per revolution	1,662 [1]
Measuring step	90°, electric/pulses per revolution
Measuring step deviation at non binary number of lines	± 0.01°
Error limits	± 0.05°

[1] See maximum revolution range.

Interfaces

Communication interface	Incremental
Communication Interface detail	TTL / RS-422
Number of signal channels	6-channel
0-set function via hardware pin	✓
0-SET function	H-active, L = 0 - 3 V, H = 4,0 - U_s V [1]
Initialization time	30 ms
Output frequency	≤ 600 kHz
Load current	≤ 30 mA
Operating current	40 mA (without load)

[1] Only with devices with M23 connector in connection with electrical interfaces M, U, V and W.

Electronics

Connection type	Male connector, M23, 12-pin, radial
Supply voltage	4.5 ... 5.5 V
Reference signal, number	1
Reference signal, position	90°, electric, logically gated with A and B
Reverse polarity protection	✓
Short-circuit protection of the outputs	✓ [1]

[1] Short-circuit opposite to another channel, US or GND permissable for maximum 30 s.

Mechanics

Mechanical design	Solid shaft, Servo flange
Shaft diameter	6 mmWith face
Shaft length	10 mm
Weight	+ 0.3 kg
Shaft material	Stainless steel
Flange material	Aluminum
Housing material	Aluminum die cast
Start up torque	0.5 Ncm (+20 °C)
Operating torque	0.3 Ncm (+20 °C)
Permissible shaft loading	80 N (radial) 40 N (axial)
Operating speed	≤ 9,000 min^{-1} [1]
Moment of inertia of the rotor	6.2 gcm^2
Bearing lifetime	3.6 x 10^10 revolutions
Angular acceleration	≤ 500,000 rad/s^2

[1] Allow for self-heating of 3.3 K per 1,000 rpm when designing the operating temperature range.

Ambient data

EMC	According to EN 61000-6-2 and EN 61000-6-3
Enclosure rating	IP67, Housing side, male connector (IEC 60529) [1] IP65, shaft side (IEC 60529)
Permissible relative humidity	90 % (Condensation not permitted)
Operating temperature range	–40 °C ... +100 °C [2] –30 °C ... +100 °C [3]
Storage temperature range	–40 °C ... +100 °C, without package
Resistance to shocks	70 g, 6 ms (EN 60068-2-27)
Resistance to vibration	30 g, 10 Hz ... 2,000 Hz (EN 60068-2-6)

[1] With mating connector fitted.
[2] Stationary position of the cable.
[3] Flexible position of the cable.

Certificates

EU declaration of conformity	✓
UK declaration of conformity	✓

ACMA declaration of conformity	✓
Moroccan declaration of conformity	✓
China-RoHS	✓
cULus certificate	✓
Information according to Art. 3 of Data Act (Regulation EU 2023/2854)	✓

Classifications

ECLASS 5.0	27270501
ECLASS 5.1.4	27270501
ECLASS 6.0	27270590
ECLASS 6.2	27270590
ECLASS 7.0	27270501
ECLASS 8.0	27270501
ECLASS 8.1	27270501
ECLASS 9.0	27270501
ECLASS 10.0	27270501
ECLASS 11.0	27270501
ECLASS 12.0	27270501
ETIM 5.0	EC001486
ETIM 6.0	EC001486
ETIM 7.0	EC001486
ETIM 8.0	EC001486
UNSPSC 16.0901	41112113

Dimensional drawing

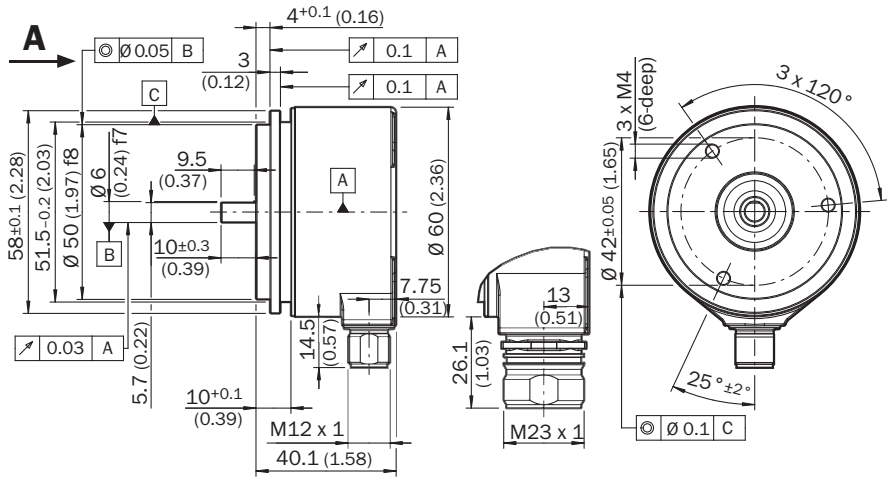

Dimensions in mm (inch)

Mounting requirements for half-shell servo clamp

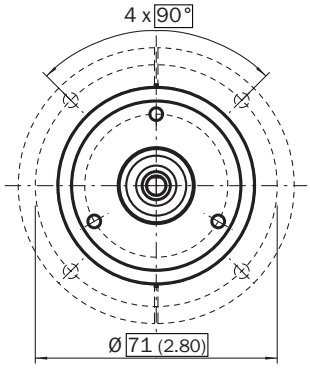

All dimensions in mm (inch)

part no. 2029165

Mounting requirements for small servo clamp

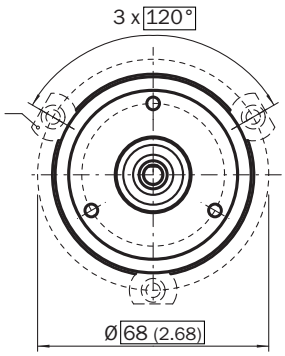

All dimensions in mm (inch)

part no. 2029166

PIN assignment

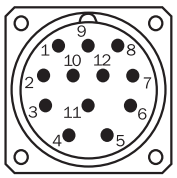

view of M23 male device connector on encoder

PINMale connector M12, 8-pin	PINMale connector M23, 12-pin	Wire colors (cable connection)	TTL/HTL signal	Sin/Cos 1.0 V_{PP}	Explanation
1	6	Brown	$\overline{A}$	COS-	Signal wire
2	5	White	A	COS+	Signal wire
3	1	Black	$\overline{B}$	SIN-	Signal wire
4	8	Pink	B	SIN+	Signal wire
5	4	Yellow	$\overline{Z}$	$\overline{Z}$	Signal wire

PINMale connector M12, 8-pin	PINMale connector M23, 12-pin	Wire colors (cable connection)	TTL/HTL signal	Sin/Cos 1.0 V_{PP}	Explanation
6	3	Purple	Z	Z	Signal wire
7	10	Blue	GND	GND	Ground connection
8	12	Red	$+U_S$	$+U_S$	Supply voltage
-	9	-	N.c.	N.c.	Not assigned
-	2	-	N.c.	N.c.	Not assigned
-	11	-	N.c.	N.c.	Not assigned
-	7 [1)]	Orange	0-SET [1)]	N.c.	Set zero pulse[1)]
Screen	Screen	Screen	Screen	Screen	Screen connected to housing on encoder side. Connected to ground on control side.

[1)]For electrical interfaces only: M, U, V, W with 0-SET function on PIN 7 on M23 plug. The 0-SET input is used to set the zero pulse to the current shaft position. If the 0-SET input is applied to US for longer than 250 ms after it has previously been open or applied to GND for at least 1,000 ms, the current shaft position is assigned zero pulse signal “Z”.

signal outputs

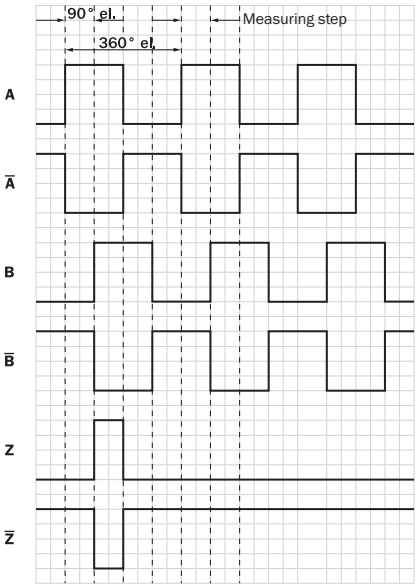

CW with view on the encoder shaft in direction “A”, compare dimensional drawing.

Supply voltage	Output
4,5 V ... 5,5 V	TTL
10 V ... 32 V	TTL
10 V ... 32 V	HTL

maximum revolution range

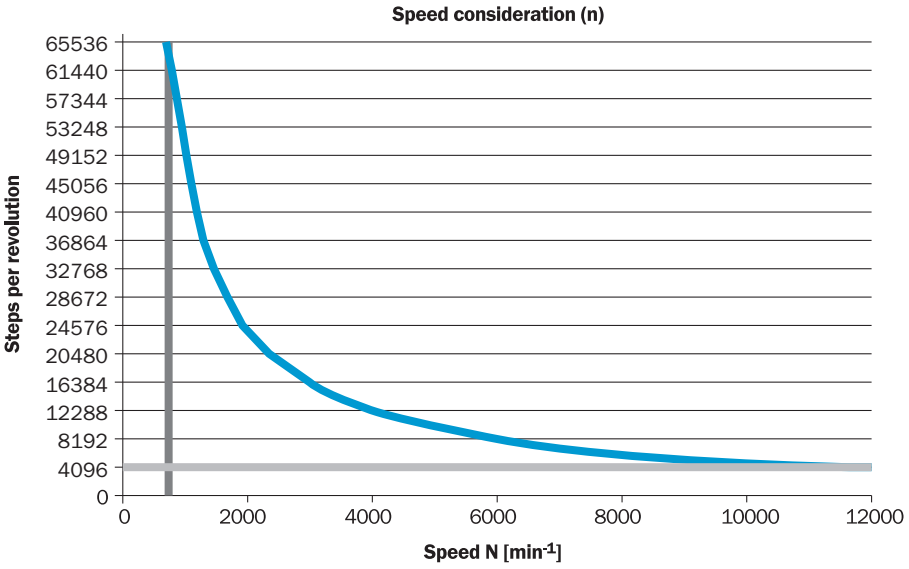

Recommended accessories

Other models and accessories ➜ www.sick.com/DFS60

	Brief description	Type	part no.
shaft adaptation			
	• **Product segment:** Shaft adaptation • **Product:** Shaft couplings • **Description:** Bellows coupling, shaft diameter 6 mm / 10 mm, maximum shaft offset: radial ± 0.25 mm, axial ± 0.4 mm, angular +/- 4°; max. speed 10,000 rpm, –30 °C to +120 °C, max. torque 120 Ncm; material: stainless steel bellows, aluminum hub	KUP-0610-B	5312982
	• **Product segment:** Shaft adaptation • **Product:** Shaft couplings • **Description:** Double loop coupling, shaft diameter 6 mm / 10 mm, max. shaft offset: radially +/- 2,5 mm, axially +/-3 mm, angle +/- 10 degrees;max. speed 3.000 rpm, –30 to +80 degrees Celsius, torsional spring stiffness of 25 Nm/rad	KUP-0610-D	5326697
	• **Product segment:** Shaft adaptation • **Product:** Shaft couplings • **Description:** Spring washer coupling, shaft diameter 6 mm / 10 mm, Maximum shaft offset: radial +/- 0.3 mm, axial +/- 0.4 mm, angular +/- 2.5°; max. speed 12,000 rpm, –10° to +80 °C, max. torque 60 Ncm; material: aluminum flange, glass fiber-reinforced polyamide membrane and hardened steel coupling pin	KUP-0610-F	5312985
	• **Product segment:** Shaft adaptation • **Product:** Shaft couplings • **Description:** Bar coupling, shaft diameter 6 mm / 10 mm, max. shaft offset: radial ± 0,3 mm, axial ± 0,3 mm, angular ± 3°; max. speed 10.000 rpm, –10° to +80 °C, max. torque: 80 Ncm, material: fiber-glass reinforced polyamide, aluminum hub	KUP-0610-S	2056407
	• **Product segment:** Shaft adaptation • **Product:** Shaft couplings • **Description:** Claw coupling, shaft diameter 6 mm / 10 mm, damping element 80 shore blue, maximum shaft offset: radial ± 0.22 mm, axial ± 1 mm angular ± 1.3°, max. speed 19,000 rpm, angle of twist max. 10°, –30 °C to +80 °C, max. torque 800 Ncm, tightening torque of screws: ISO 4029 150 Ncm, material: aluminum flange, damping element: polyurethane	KUP-0610-J	2127056
	• **Product segment:** Shaft adaptation • **Product:** Shaft couplings • **Description:** Bar coupling, shaft diameter 6 mm /8 mm, maximum shaft offset radial ± 0.3 mm, axial ± 0.2 mm, angle ± 3°, max. speed 10,000 rpm, torsion spring rigidity 38 Nm/wheel; material: fiber-glass reinforced polyamide, aluminum hub	KUP-0608-S	5314179
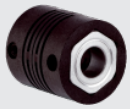	• **Product segment:** Shaft adaptation • **Product:** Shaft couplings • **Description:** Cross-slotted coupling, shaft diameter 6 mm / 6 mm, maximum shaft offset: radial ± 0.3 mm, axial ± 0.2 mm, angle ± 3°; max. speed 10,000 rpm, –10° to +80 °C, max. torque 80 Ncm; material: fiber-glass reinforced polyamide, aluminum hub	KUP-0606-S	2056406
	• **Product segment:** Shaft adaptation • **Product:** Shaft couplings • **Description:** Bellows coupling, shaft diameter 6 mm / 6 mm, maximum shaft offset: radial ± 0.25 mm, axial ± 0.4 mm, angular +/- 4°; max. speed 10,000 rpm, –30 °C to +120 °C, max. torque 120 Ncm; material: stainless steel bellows, aluminum hub	KUP-0606-B	5312981

	Brief description	Type	part no.
measuring wheels and measuring wheel mechanics			
	• **Product segment:** Measuring wheels and measuring wheel mechanics • **Product family:** Measuring wheels • **Description:** Aluminum measuring wheel with studded polyurethane surface for 6 mm solid shaft, circumference 200 mm	BEF-MR06200APN	4084747
	• **Product segment:** Measuring wheels and measuring wheel mechanics • **Product family:** Measuring wheels • **Description:** Aluminium measuring wheel with O-ring (NBR70) for 6 mm solid shaft, circumference 200 mm	BEF-MR006020R	2055222
	• **Product segment:** Measuring wheels and measuring wheel mechanics • **Product family:** Measuring wheels • **Description:** Measuring wheel with O-ring (NBR70) for 6 mm solid shaft, circumference 300 mm	BEF-MR006030R	2055634
	• **Product segment:** Measuring wheels and measuring wheel mechanics • **Product family:** Measuring wheels • **Description:** Aluminium measuring wheel with O-ring (NBR70) for 6 mm solid shaft, circumference 500 mm	BEF-MR006050R	2055225
	• **Product segment:** Measuring wheels and measuring wheel mechanics • **Product family:** Measuring wheels • **Description:** Aluminum measuring wheel with cross-knurled surface for 6 mm solid shaft, circumference 200 mm	BEF-MR06200AK	4084745
	• **Product segment:** Measuring wheels and measuring wheel mechanics • **Product family:** Measuring wheels • **Description:** Aluminum measuring wheel with smooth polyurethane surface for 6 mm solid shaft, circumference 200 mm	BEF-MR06200AP	4084746
	• **Product segment:** Measuring wheels and measuring wheel mechanics • **Product family:** Measuring wheels • **Description:** Aluminum measuring wheel with ridged polyurethane surface for 6 mm solid shaft, circumference 200 mm	BEF-MR06200APG	4084748

	Brief description	Type	part no.
Mounting systems			
	• **Description:** Bearing block for servo and face mount flange encoder. The heavy-duty bearing block is used to absorb very large radial and axial shaft loads. Particularly when using belt pulleys, chain sprockets, friction wheels. Operating speed max. 4,000 rpm^-1, axial shaft load 150 N, radial shaft load 250 N, bearing service life 3.6 x 10^9 revolutions	BEF-FA-LB1210	2044591
	• **Description:** Mounting kit for servo flange encoder on the bearing block, 1 bar coupling SKPS 1520 06/06 1 hexagon socket wrench SW1.5 DIN 911, 3 mounting eccentric BEMN 1242 49 3 screws M4 x 10 DIN 912,1 hexagon socket wrench SW3 DIN 911 • **Items supplied:** 1 bar coupling SKPS 1520 06/06 1 hexagon socket wrench SW1.5 DIN 911, 3 mounting eccentric BEMN 1242 49 3 screws M4 x 10 DIN 912, 1 hexagon socket wrench SW3 DIN 911	BEF-MK-LB	5320872
	• **Description:** Servo clamps, large, for servo flange (clamps, eccentric fastener), 3 pcs, without mounting material • **Items supplied:** Without mounting hardware	BEF-WK-SF	2029166
	• **Description:** Mounting bell for encoder with servo flange, 50 mm spigot • **Items supplied:** Mounting kit included	BEF-MG-50	5312987

	Brief description	Type	part no.
connectors and cables			
	• **Connection type head A:** Female connector, M23, 12-pin, straight • **Connection type head B:** Flying leads • **Signal type:** Incremental • **Cable:** 15 m, 11-wire, PUR • **Description:** Incremental, shielded	DOL-2312-G15MLD1	2062205
	• **Connection type head A:** Female connector, M23, 12-pin, straight • **Connection type head B:** Flying leads • **Signal type:** Incremental • **Cable:** 2 m, 11-wire, PUR • **Description:** Incremental, shielded	DOL-2312-G02MLD1	2062202
	• **Connection type head A:** Female connector, M23, 12-pin, straight • **Connection type head B:** Flying leads • **Signal type:** Incremental • **Cable:** 7 m, 11-wire, PUR • **Description:** Incremental, shielded	DOL-2312-G07MLD1	2062203
	• **Connection type head A:** Female connector, M23, 12-pin, straight • **Connection type head B:** Flying leads • **Signal type:** Incremental • **Cable:** 10 m, 11-wire, PUR • **Description:** Incremental, shielded	DOL-2312-G10MLD1	2062204
	• **Connection type head A:** Female connector, M23, 12-pin, straight • **Connection type head B:** Flying leads • **Signal type:** Incremental • **Cable:** 20 m, 11-wire, PUR • **Description:** Incremental, shielded	DOL-2312-G20MLD1	2062206
	• **Connection type head A:** Female connector, M23, 12-pin, straight • **Connection type head B:** Flying leads • **Signal type:** Incremental • **Cable:** 25 m, 11-wire, PUR • **Description:** Incremental, shielded	DOL-2312-G25MLD1	2062207
	• **Connection type head A:** Female connector, M23, 12-pin, straight • **Connection type head B:** Flying leads • **Signal type:** Incremental • **Cable:** 30 m, 11-wire, PUR • **Description:** Incremental, shielded	DOL-2312-G30MLD1	2062208
	• **Connection type head A:** Female connector, M23, 12-pin, straight • **Connection type head B:** Flying leads • **Signal type:** Incremental • **Cable:** 1.5 m, 12-wire, PUR, halogen-free • **Description:** Incremental, shielded	DOL-2312-G1M5MD1	2062240
	• **Connection type head A:** Female connector, M23, 12-pin, straight • **Connection type head B:** Flying leads • **Signal type:** Incremental • **Cable:** 3 m, 12-wire, PUR, halogen-free • **Description:** Incremental, shielded	DOL-2312-G03MMD1	2062243
	• **Connection type head A:** Female connector, M23, 12-pin, straight • **Connection type head B:** Flying leads • **Signal type:** Incremental • **Cable:** 5 m, 12-wire, PUR, halogen-free • **Description:** Incremental, shielded	DOL-2312-G05MMD1	2062244
	• **Connection type head A:** Female connector, M23, 12-pin, straight • **Connection type head B:** Flying leads • **Signal type:** Incremental • **Cable:** 10 m, 12-wire, PUR, halogen-free • **Description:** Incremental, shielded	DOL-2312-G10MMD1	2062245
	• **Connection type head A:** Female connector, M23, 12-pin, straight • **Connection type head B:** Flying leads • **Signal type:** Incremental • **Cable:** 20 m, 12-wire, PUR, halogen-free • **Description:** Incremental, shielded	DOL-2312-G20MMD1	2062246
	• **Connection type head A:** Female connector, M23, 12-pin, straight • **Connection type head B:** Flying leads • **Signal type:** Incremental • **Cable:** 30 m, 12-wire, PUR, halogen-free	DOL-2312-G30MMD1	2062247

	Brief description	Type	part no.
	• **Description:** Incremental, shielded		
	• **Connection type head A:** Female connector, M23, 12-pin, straight, A-coded • **Signal type:** HIPERFACE®, SSI, Incremental • **Description:** HIPERFACE®, shieldedSSIIncremental • **Connection systems:** Solder connection	DOS-2312-G02	2077057
	• **Connection type head A:** Female connector, M23, 12-pin, angled, A-coded • **Signal type:** HIPERFACE®, SSI, Incremental • **Description:** HIPERFACE®, shieldedSSIIncremental • **Connection systems:** Solder connection	DOS-2312-W01	2072580

SICK AT A GLANCE

SICK is one of the leading manufacturers of intelligent sensors and sensor solutions for industrial applications. A unique range of products and services creates the perfect basis for controlling processes securely and efficiently, protecting individuals from accidents and preventing damage to the environment.

We have extensive experience in a wide range of industries and understand their processes and requirements. With intelligent sensors, we can deliver exactly what our customers need. In application centers in Europe, Asia and North America, system solutions are tested and optimized in accordance with customer specifications. All this makes us a reliable supplier and development partner.

Comprehensive services complete our offering: SICK LifeTime Services provide support throughout the machine life cycle and ensure safety and productivity.

For us, that is “Sensor Intelligence.”

WORLDWIDE PRESENCE:

Contacts and other locations –www.sick.com