925387-2 ✔ ACTIVE

FASTON | FASTON 110

TE Internal #: 925387-2

Crimp Terminal Housings, Receptacle, Receptacle, 1 Position, Straight, UL 94V-0, Clear, Polycarbonate, Mating Alignment, FASTON 110

View on TE.com >

Terminals & Splices > Terminal Housings, Insulation Sleeves & Blocks > Crimp Terminal Housings

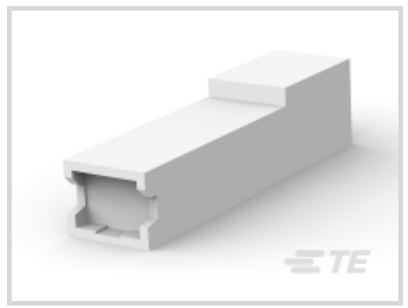




Terminal Type: **Receptacle**

Connector & Housing Type: **Receptacle**

Number of Positions: **1**

Terminal Orientation: **Straight**

UL Flammability Rating: **UL 94V-0**

Features

Product Type Features

Sealable	No
Connector & Housing Type	Receptacle

Configuration Features

Number of Positions	1

Body Features

Primary Product Color	Clear

Contact Features

Terminal Type	Receptacle
Terminal Orientation	Straight
Contact Mating Retention	Without

Mechanical Attachment

Mating Alignment	With
Connector Mounting Type	Cable Mount (Free-Hanging)

Housing Features

Housing Material	Polycarbonate

Dimensions

Product Length	20 mm[.79 in]

Usage Conditions

Operating Temperature Range	-40 – 105 °C[-40 – 221 °F]

Industry Standards

UL Flammability Rating	UL 94V-0

Packaging Features

Packaging Quantity	1000
Packaging Method	Carton

Product Compliance

For compliance documentation, visit the product page on TE.com>

EU RoHS Directive 2011/65/EU	Compliant
EU ELV Directive 2000/53/EC	Compliant
China RoHS 2 Directive MIIT Order No 32, 2016	No Restricted Materials Above Threshold
EU REACH Regulation (EC) No. 1907/2006	Current ECHA Candidate List: JAN 2024 (240) Candidate List Declared Against: JAN 2024 (240) SVHC > Threshold: Perfluorobutane sulfonic acid (PFBS) and its salts (.2% in Component Part) **Article Safe Usage Statements:** Do not eat, drink or smoke when using this product. Wash thoroughly after handling. Recycle if possible and dispose of the article by following all applicable governmental regulations relevant to your geographic location.
Halogen Content	Low Bromine/Chlorine - Br and Cl < 900 ppm per homogenous material. Also BFR /CFR/PVC Free
Solder Process Capability	Not applicable for solder process capability

Product Compliance Disclaimer

This information is provided based on reasonable inquiry of our suppliers and represents our current actual knowledge based on the information they provided. This information is subject to change. The part numbers that TE has identified as EU RoHS compliant have a maximum concentration of 0.1% by weight in homogenous materials for lead, hexavalent chromium, mercury, PBB, PBDE, DBP, BBP, DEHP, DIBP, and 0.01% for cadmium, or qualify for an exemption to these limits as defined in the Annexes of Directive 2011/65/EU (RoHS2). Finished electrical and electronic equipment products will be CE marked as required by Directive 2011/65/EU. Components may not be CE marked. Additionally, the part numbers that TE has identified as EU ELV compliant have a maximum concentration of 0.1% by weight in homogenous materials for lead, hexavalent chromium, and mercury, and 0.01% for cadmium, or qualify for an exemption to these limits as defined in the Annexes of Directive 2000/53/EC (ELV). Regarding the REACH Regulation, the information TE provides

on SVHC in articles for this part number is based on the latest European Chemicals Agency (ECHA) 'Guidance on requirements for substances in articles' posted at this URL: https://echa.europa.eu/guidance-documents/guidance-on-reach

Compatible Parts

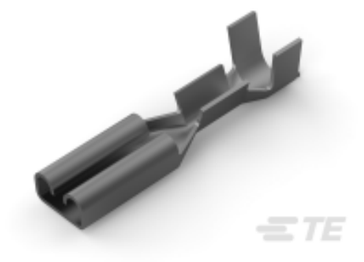

TE Part # 150346-2
110 MINI FASTON,REC.,24-20 AWG, TPBR



TE Part # 926410-1
110 FASTON HSG. REC. 1P CLEAR

Also in the Series | FASTON 110



Crimp Terminal Housings(13)



Insertion & Extraction Tools(1)



PCB Terminals(22)

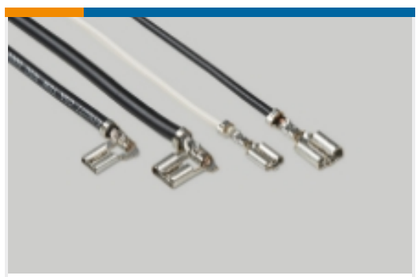

Quick Disconnects(169)

Customers Also Bought



TE Part #5-103735-5
06 MTE HDR SRST LATCH .100CL

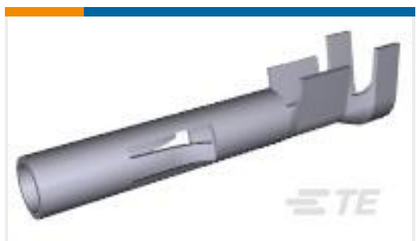

TE Part #350550-1
UMNL SOK 20-14 PTPBR L/P



TE Part #104257-5
06 MTE RCPT HSG SR LATCH .100



TE Part #2-520129-2
ULTRAFAST 250 ASSY FLAG 22-18 TPBR LP



TE Part #104257-3
04 MTE RCPT HSG SR LATCH .100



TE Part #5-103735-3
04 MTE HDR SRST LATCH .100CL



TE Part #5-103735-1
02 MTE HDR SRST LATCH .100CL



TE Part #1393243-4
RTE24012

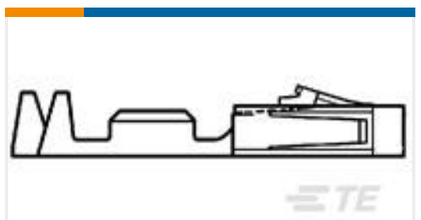

TE Part #1-104479-0
SHORT POINT CONT 30 DPLX STMPD LF



TE Part #180437-2
110 FASTON,REC.,20-16 AWG,PTBR

Documents

Product Drawings

110 FASTON HSG. REC. 1P CLEAR

English

CAD Files

3D PDF

3D

Customer View Model

ENG_CVM_CVM_925387-2_P.2d_dxf.zip

English

Customer View Model

ENG_CVM_CVM_925387-2_P.3d_igs.zip

English

Customer View Model

ENG_CVM_CVM_925387-2_P.3d_stp.zip

English

By downloading the CAD file I accept and agree to the Terms and Conditions of use.