Data sheet



ARS25-26408192

ARS25

ABSOLUTE ENCODERS

SICK
Sensor Intelligence.



Illustration may differ

Ordering information

Type	part no.
ARS25-26408192	7102036

Other models and accessories ➜ www.sick.com/ARS25

Detailed technical data

Performance

Number of steps per revolution (max. resolution)	8,192 (13 bit)
Measuring step	360° /number of steps
Measuring step deviation	0.005° binary number of steps 0.016° non-binary number of steps
Error limits G	0.035° (binary number of steps) 0.046° (non-binary number of steps)
Repeatability standard deviation σ_r	0.005°

Interfaces

Communication interface	SSI
Communication Interface detail	SSI + incremental / Open Collector
Initialization time	40 ms
Code type	Gray
Code sequence parameter adjustable	CW (clockwise) [1]
Measured value backlash	0.005°
Response threshold	0.003°

[1] Increasing when viewing the clockwise rotating shaft.

Electrical data

Connection type	Male connector, MS, 23-pin, radial
Supply voltage	8 ... 24 V
Switching level of control inputs	Logic H = 0.7 x U_S, Logic L = 0 V ... 0.3 x U_S
Actuation of set button	≥ 100 ms [1]

[1] Only with shaft stationary (note initialisation time).

Mechanical data

Mechanical design	Solid shaft, Servo flange
Shaft diameter	3/8″
Weight	Approx. 0.35 kg [1]

[1] Based on encoder with male connector.

Start up torque	3.4 Ncm
Operating torque	2.6 Ncm
Permissible shaft loading	20 N (radial) 10 N (axial)
Operating speed	≤ 6,000 min^{-1} with shaft seal ≤ 10,000 min^{-1} without shaft seal
Moment of inertia of the rotor	54 gcm^2
Bearing lifetime	3.6 x 10^9 revolutions
Angular acceleration	≤ 500,000 rad/s^2

[1] Based on encoder with male connector.

Ambient data

EMC	According to EN 61000-6-2 and EN 61000-6-3
Permissible relative humidity	90 % (Condensation not permitted)
Operating temperature range	–20 °C ... +85 °C
Storage temperature range	–40 °C ... +100 °C
Resistance to shocks	50 g, 11 ms (EN 60068-2-27)
Resistance to vibration	20 g, 10 Hz ... 150 Hz (EN 60068-2-6)

Certificates

EU declaration of conformity	✓
UK declaration of conformity	✓

Classifications

ECLASS 5.0	27270502
ECLASS 5.1.4	27270502
ECLASS 6.0	27270590
ECLASS 6.2	27270590
ECLASS 7.0	27270502
ECLASS 8.0	27270502
ECLASS 8.1	27270502
ECLASS 9.0	27270502
ECLASS 10.0	27270502
ECLASS 11.0	27270502
ECLASS 12.0	27270502
ETIM 5.0	EC001486
ETIM 6.0	EC001486
ETIM 7.0	EC001486
ETIM 8.0	EC001486
UNSPSC 16.0901	41112113

Dimensional drawing

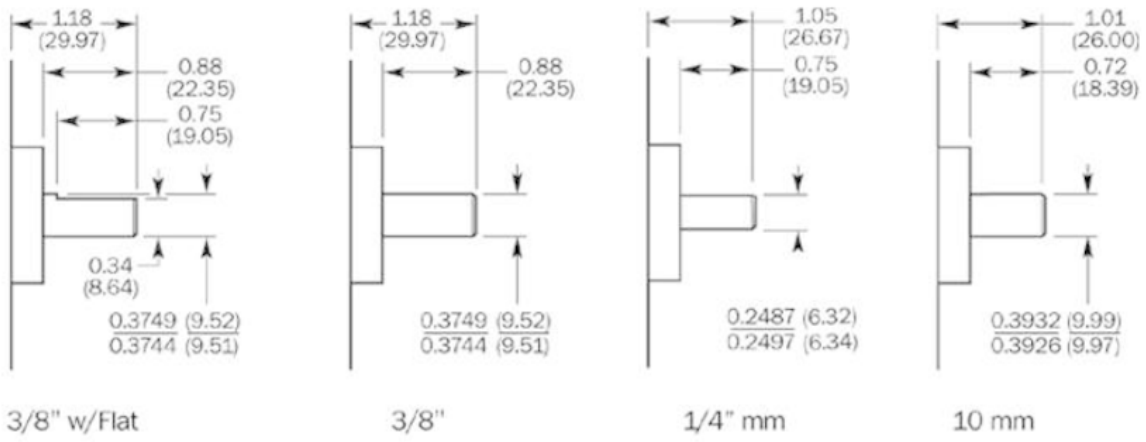

Dimensions in mm (inch)

Dimensional drawing

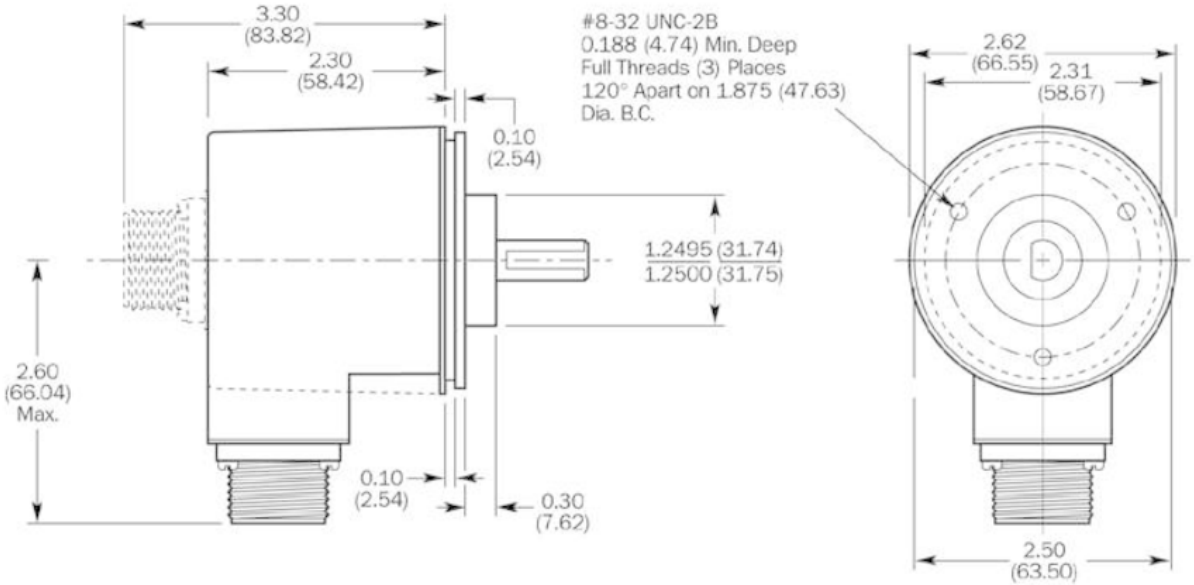

Dimensions in mm (inch)

SICK AT A GLANCE

SICK is one of the leading manufacturers of intelligent sensors and sensor solutions for industrial applications. A unique range of products and services creates the perfect basis for controlling processes securely and efficiently, protecting individuals from accidents and preventing damage to the environment.

We have extensive experience in a wide range of industries and understand their processes and requirements. With intelligent sensors, we can deliver exactly what our customers need. In application centers in Europe, Asia and North America, system solutions are tested and optimized in accordance with customer specifications. All this makes us a reliable supplier and development partner.

Comprehensive services complete our offering: SICK LifeTime Services provide support throughout the machine life cycle and ensure safety and productivity.

For us, that is “Sensor Intelligence.”

WORLDWIDE PRESENCE:

Contacts and other locations –www.sick.com