

Inductive power clamp sensor

NBN2-F58xxA3-100S3

- Technical data are only valid if amplifier unit is connected
- 2 mm non-flush
- For use in direct- and alternating-field welding systems
- Completely halogen and silicon free

Satellite unit

Dimensions

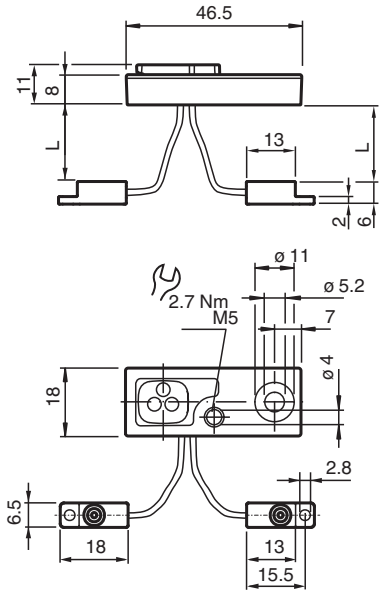

Technical Data

General specifications		
Rated operating distance	s_n	2 mm
Installation		non-flush
Compliance with standards and directives		
Standard conformity		
Standards		EN IEC 60947-5-2
Approvals and certificates		
UL approval		cULus Listed, General Purpose
Ambient conditions		
Ambient temperature		0 ... 50 °C (32 ... 122 °F)
Storage temperature		-25 ... 70 °C (-13 ... 158 °F)
Mechanical specifications		

Release date: 2024-05-28 Date of issue: 2024-06-04 Filename: 276935_eng.pdf

Technical Data

Connection type		Spring contacts, 3 pins flexible leads PUR (halogen-free) L = 100 mm ± 5 mm
Housing material		PA 6 / Diecast zinc
Degree of protection		IP65
Dimensions		
Height		8 mm
Width		18 mm
Length		47 mm
Note		only for use with amplifier unit of NBxx-F58A3x3 family

Release date: 2024-05-28 Date of issue: 2024-06-04 Filename: 276935_eng.pdf