Data sheet | Item number: 2624-1504

PCB terminal block; 4 mm²; Pin spacing 11.5 mm; 4-pole; Push-in CAGE CLAMP®; 4,00 mm²; gray

www.wago.com/2624-1504

Picture differs from the item.

Color:

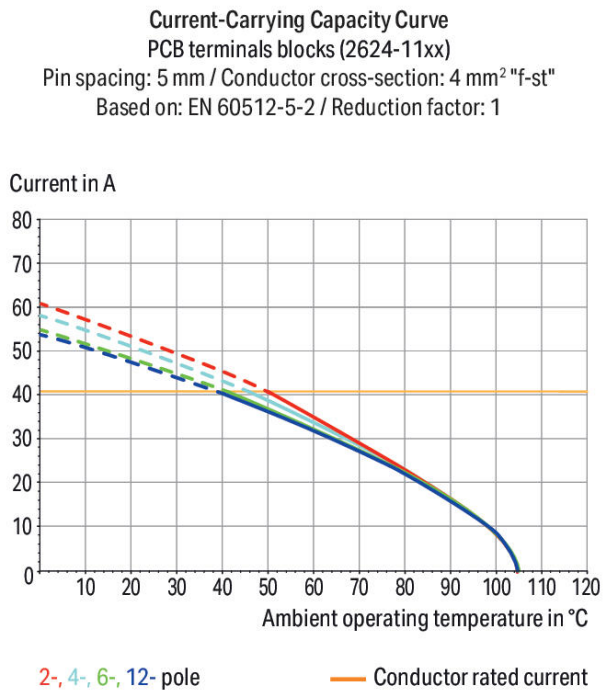

Subject to changes. Please also observe the further product documentation!

WAGO GmbH & Co. KG
Hansastr. 27
32423 Minden
Phone: +49571 887-0 | Fax: +49571 887-169
Email: info.de@wago.com | Web: www.wago.com

Do you have any questions about our products?
We are always happy to take your call at +49 (571) 887-44222.

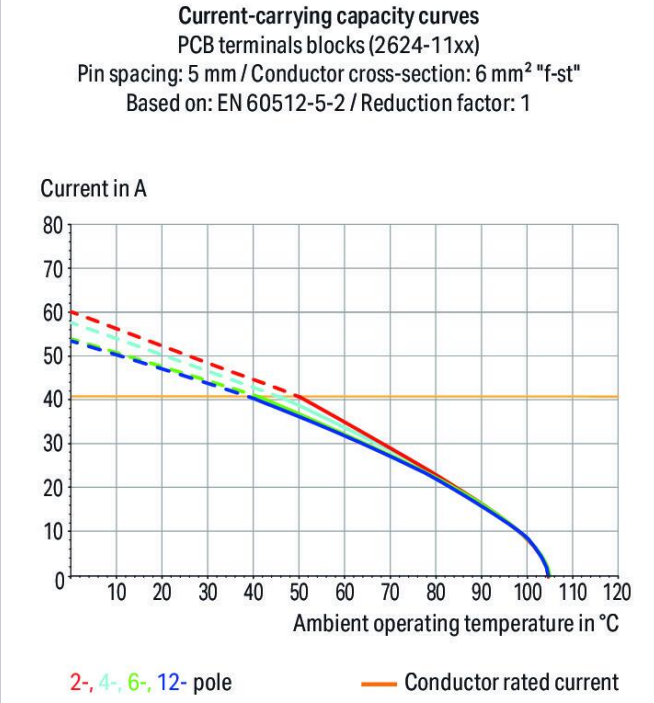

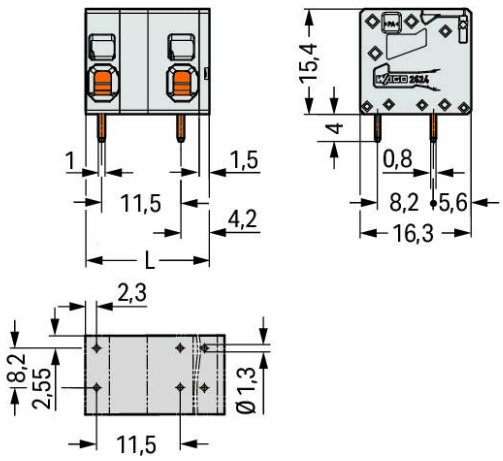

Dimensions in mm
L = (pole no. – 1) x pin spacing + 6.5 mm

Item description

- PCB terminal blocks with Push-in CAGE CLAMP® connection
- Push-in termination of solid and ferruled conductors
- Ideal for panel feedthrough applications via operation parallel to conductor entry
- Testing can be performed both parallel and perpendicular to conductor entry

Data
Notes

Variants:	Other pole numbers Direct marking Other colors Other versions (or variants) can be requested from WAGO Sales or configured at https://configurator.wago.com/.

Electrical data

Subject to changes. Please also observe the further product documentation!

WAGO GmbH & Co. KG
Hansastr. 27
32423 Minden
Phone: +49571 887-0 | Fax: +49571 887-169
Email: info.de@wago.com | Web: www.wago.com

Do you have any questions about our products?
We are always happy to take your call at +49 (571) 887-44222.

Ratings per IEC/EN

Ratings per	IEC/EN 60664-1
Nominal voltage (III/3)	1000 V
Rated impulse voltage (III/3)	8 kV
Rated voltage (III/2)	1000 V
Rated impulse voltage (III/2)	8 kV
Nominal voltage (II/2)	1000 V
Rated surge voltage (II/2)	8 kV
Rated current	41 A
Legend (ratings)	(III / 2) ≙ Overvoltage category III / Pollution degree 2

Ratings per UL

Approvals per	UL 1059
Rated voltage UL (Use Group B)	600 V
Rated current UL (Use Group B)	26 A
Rated voltage UL (Use Group C)	600 V
Rated current UL (Use Group C)	26 A

Ratings per CSA

Approvals per	CSA
Rated voltage CSA (Use Group B)	600 V
Rated current CSA (Use Group B)	26 A
Rated voltage CSA (Use Group C)	600 V
Rated current CSA (Use Group C)	26 A

Connection data

Connection points	4
Total number of potentials	4
Number of connection types	1
Number of levels	1

Connection 1

Connection technology	Push-in CAGE CLAMP®
Actuation type	Operating tool
Solid conductor	0.2 … 6 mm² / 24 … 10 AWG

Subject to changes. Please also observe the further product documentation!

WAGO GmbH & Co. KG
Hansastr. 27
32423 Minden
Phone: +49571 887-0 | Fax: +49571 887-169
Email: info.de@wago.com | Web: www.wago.com

Do you have any questions about our products?
We are always happy to take your call at +49 (571) 887-44222.

Fine-stranded conductor	0.2 … 6 mm² / 24 … 10 AWG
Fine-stranded conductor; with insulated ferrule	0.25 … 2.5 mm²
Fine-stranded conductor; with uninsulated ferrule	0.25 … 2.5 mm²
Fine-stranded conductor; with twin ferrule	0.25 … 1.5 mm²
Strip length	10 … 12 mm / 0.39 … 0.47 inches
Conductor connection direction to PCB	0 °
Pole number	4

Physical data

Pin spacing	11.5 mm / 0.453 inches
Width	41 mm / 1.614 inches
Height	19.4 mm / 0.764 inches
Height from the surface	15.4 mm / 0.606 inches
Depth	16.3 mm / 0.642 inches
Solder pin length	4 mm
Solder pin dimensions	0.8 x 1 mm
Drilled hole diameter with tolerance	$1.3\ ^{(+0.1)}$ mm

Mechanical data

Mounting type	Feed-through mounting

PCB contact

PCB contact	THT
Solder pin arrangement	over the entire terminal strip (in-line)
Number of solder pins per potential	2

Material data

Note (material data)	Information on material specifications can be found here
Color	gray
Material group	I
Insulation material	Polyamide (PA66)
Flammability class per UL94	V0
Clamping spring material	Chrome-nickel spring steel (CrNi)
Contact material	Electrolytic copper (E_{Cu})

Subject to changes. Please also observe the further product documentation!

WAGO GmbH & Co. KG
Hansastr. 27
32423 Minden
Phone: +49571 887-0 | Fax: +49571 887-169
Email: info.de@wago.com | Web: www.wago.com

Do you have any questions about our products?
We are always happy to take your call at +49 (571) 887-44222.

Contact plating	Tin
Weight	9.3 g

Environmental requirements

Limit temperature range	-60 … +105 °C
Processing temperature	-35 … +60 °C
Continuous operating temperature	-60 … +105 °C

Commercial data

eCl@ss 10.0	27-44-04-01
eCl@ss 9.0	27-44-04-01
ETIM 8.0	EC002643
ETIM 7.0	EC002643
ECCN	NO DATA
PU (SPU)	50 pcs
Packaging type	box
Country of origin	DE
GTIN	4055143578578
Customs tariff number	85369010000

Environmental Product Compliance

RoHS Compliance Status	Compliant,No Exemption

Approvals / Certificates

General approvals

Logo	Approval	Additional Approval Text	Certificate name
	CB DEKRA Certification B.V.	IEC 60947-7-4	NL-61583
	CSA DEKRA Certification B.V.	C22.2 No. 158	70117145
	cURus Underwriters Laboratories Inc.	UL 1059	E45172
	KEMA/KEUR	EN 60947-7-4	71-

Subject to changes. Please also observe the further product documentation!

WAGO GmbH & Co. KG
Hansastr. 27
32423 Minden
Phone: +49571 887-0 | Fax: +49571 887-169
Email: info.de@wago.com | Web: www.wago.com

Do you have any questions about our products?
We are always happy to take your call at +49 (571) 887-44222.

DEKRA Certification B.V. 100535

Optional accessories

Tool

Operating tool

Item no.: 210-720
Operating tool; Blade: 3.5 x 0.5 mm; with a partially insulated shaft; multicoloured
www.wago.com/210-720

Ferrule

Ferrule

Item no.: 216-106
Ferrule; Sleeve for 2.5 mm² / AWG 14; uninsulated; electro-tin plated; silver-colored
www.wago.com/216-106

Item no.: 216-241
Ferrule; Sleeve for 0.5 mm² / 20 AWG; insulated; electro-tin plated; electrolytic copper; gastight crimped; acc. to DIN 46228, Part 4/09.90; white
www.wago.com/216-241

Item no.: 216-242
Ferrule; Sleeve for 0.75 mm² / 18 AWG; insulated; electro-tin plated; electrolytic copper; gastight crimped; acc. to DIN 46228, Part 4/09.90; gray
www.wago.com/216-242

Item no.: 216-243
Ferrule; Sleeve for 1 mm² / AWG 18; insulated; electro-tin plated; electrolytic copper; gastight crimped; acc. to DIN 46228, Part 4/09.90; red
www.wago.com/216-243

Item no.: 216-244
Ferrule; Sleeve for 1.5 mm² / AWG 16; insulated; electro-tin plated; electrolytic copper; gastight crimped; acc. to DIN 46228, Part 4/09.90; black
www.wago.com/216-244

Item no.: 216-263
Ferrule; Sleeve for 1 mm² / AWG 18; insulated; electro-tin plated; electrolytic copper; gastight crimped; acc. to DIN 46228, Part 4/09.90; red
www.wago.com/216-263

Item no.: 216-246
Ferrule; Sleeve for 2.5 mm² / AWG 14; insulated; electro-tin plated; electrolytic copper; gastight crimped; acc. to DIN 46228, Part 4/09.90; blue
www.wago.com/216-246

Item no.: 216-266
Ferrule; Sleeve for 2.5 mm² / AWG 14; insulated; electro-tin plated; electrolytic copper; gastight crimped; acc. to DIN 46228, Part 4/09.90; blue
www.wago.com/216-266

Item no.: 216-264
Ferrule; Sleeve for 1.5 mm² / AWG 16; insulated; electro-tin plated; electrolytic copper; gastight crimped; acc. to DIN 46228, Part 4/09.90; black
www.wago.com/216-264

Item no.: 216-262
Ferrule; Sleeve for 0.75 mm² / 18 AWG; insulated; electro-tin plated; electrolytic copper; gastight crimped; acc. to DIN 46228, Part 4/09.90; gray
www.wago.com/216-262

Subject to changes. Please also observe the further product documentation!

WAGO GmbH & Co. KG
Hansastr. 27
32423 Minden
Phone: +49571 887-0 | Fax: +49571 887-169
Email: info.de@wago.com | Web: www.wago.com

Do you have any questions about our products?
We are always happy to take your call at +49 (571) 887-44222.

Downloads

Documentation

Additional Information

Technical Section Technical explanations	2019 年4月3日	pdf 2.1 MB	Download

CAD/CAE-Data

CAD data

2D/3D Models 2624-1504	URL	Download

PCB Design

Symbol and Footprint via Ultra Librarian 2624-1504	URL	Download

CAx data for your PCB design, consisting of "schematic symbols and PCB footprints", allow easy integration of the WAGO component into your development environment.

Supported formats:

- Accel EDA 14 & 15
- Altair
- Altium 6 to current version
- Autodesk Fusion 360
- Cadence Allegro
- DesignSpark
- Eagle Libraries
- KiCad
- Mentor Graphics
- BoardStation
- Mentor Graphics Design Architect
- Mentor Graphics Design
- Expedition 99 and 2000
- OrCAD 9.X PCB and Capture
- PADS PowerPCB 3, 3.5, 4.X, and 5.X
- PADS PowerPCB and PowerLogic 3.0
- PCAD 2000, 2001, 2002, 2004, and 2006
- Pulsonix 8.5 or newer
- STL

Subject to changes. Please also observe the further product documentation!

WAGO GmbH & Co. KG
Hansastr. 27
32423 Minden
Phone: +49571 887-0 | Fax: +49571 887-169
Email: info.de@wago.com | Web: www.wago.com

Do you have any questions about our products?
We are always happy to take your call at +49 (571) 887-44222.

- 3D STEP
- TARGET 3001!
- View Logic ViewDraw
- Quadcept
- Zuken CadStar 3 and 4
- Zuken CR-5000 and CR-8000
- Zuken eCADSTAR 2020 and 2021Zuken CR-5000 and CR-8000

PCB Component Libraries (EDA), PCB CAD Library Ultra Librarian

Symbol and Footprint via SamacSys 2624-1504	URL	Download

CAx data for your PCB design, consisting of "schematic symbols and PCB footprints", allow easy integration of the WAGO component into your development environment.

Supported formats:

- 3D (stp)
- Altium
- CADSTAR
- Capture
- CircuitStudio
- CR-5000
- CR-8000
- DEHDL
- DesignSpark PCB
- DesignSpark PCB PRO
- DipTrace
- EAGLE
- Easy-PC
- EasyEDA
- eCADSTAR
- KiCad
- OrCAD_Allegro16
- PADS
- Proteus
- Pulsonix
- Quadcept
- SOLIDWORKS PCB
- TARGET 3001!

Subject to changes. Please also observe the further product documentation!

WAGO GmbH & Co. KG
Hansastr. 27
32423 Minden
Phone: +49571 887-0 | Fax: +49571 887-169
Email: info.de@wago.com | Web: www.wago.com

Do you have any questions about our products?
We are always happy to take your call at +49 (571) 887-44222.

- xDX Designer
- Xpedition

PCB Component Libraries (EDA), PCB CAD Library SamacSys Electronic Component Search Engine

CAE data

ZUKEN Portal 2624-1504	URL	Download

Asset Administration Shell

Asset Administration Shell 2624-1504	URL	Download

Environmental Product Compliance

Compliance Search

Environmental Product Compliance 2624-1504 PCB terminal block; 4 mm²; Pin spacing 11.5 mm; 4-pole; Push-in CAGE CLAMP®; 4,00 mm²; gray	URL	Download

Installation Notes

Conductor termination

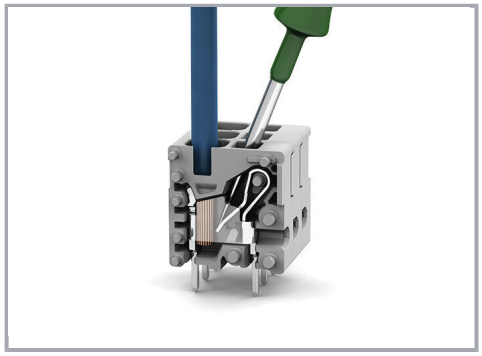

Insert fine-stranded conductors and remove all conductor types via operating tool.

Conductor termination

WAGO GmbH & Co. KG
Hansastr. 27
32423 Minden
Phone: +49571 887-0 | Fax: +49571 887-169
Email: info.de@wago.com | Web: www.wago.com

Do you have any questions about our products?
We are always happy to take your call at +49 (571) 887-44222.

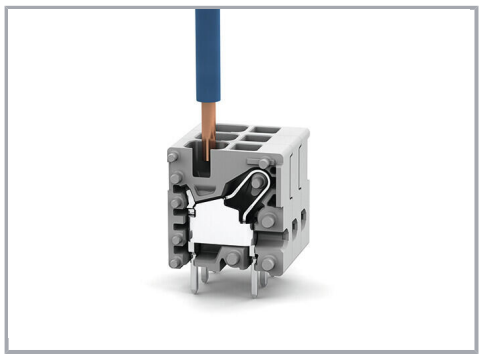

Insert solid conductors via push-in termination.

Subject to changes. Please also observe the further product documentation!

WAGO GmbH & Co. KG
Hansastr. 27
32423 Minden
Phone: +49571 887-0 | Fax: +49571 887-169
Email: info.de@wago.com | Web: www.wago.com

Do you have any questions about our products?
We are always happy to take your call at +49 (571) 887-44222.