Data sheet

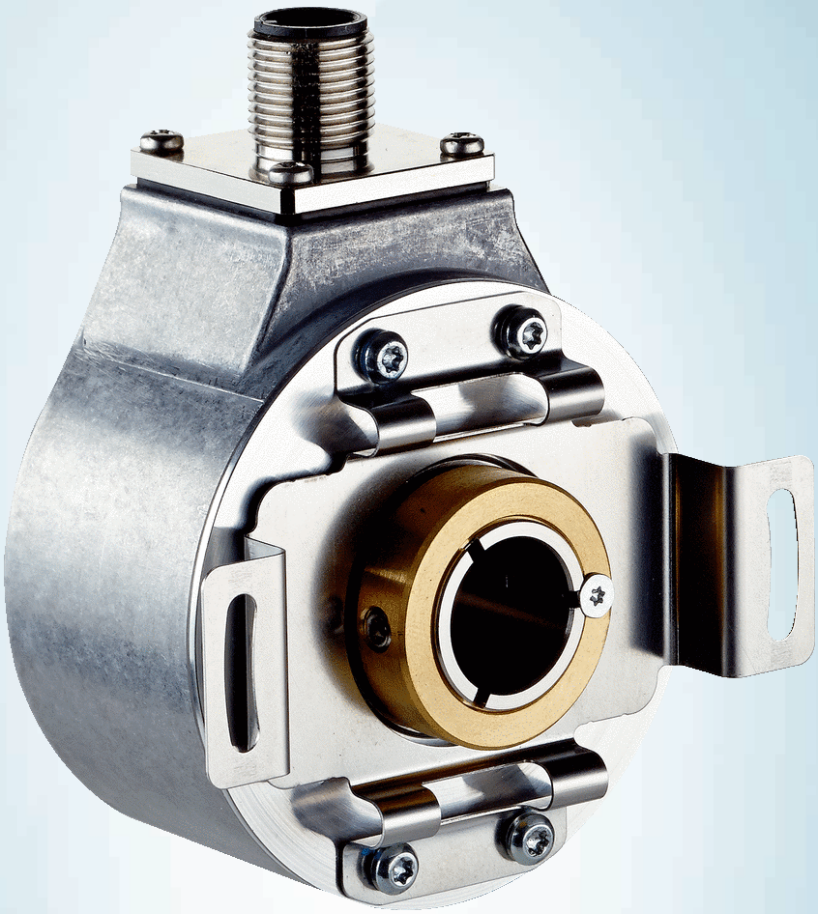

# DBS60E-T5ECB0512

## DBS60

INCREMENTAL ENCODERS

SICK
Sensor Intelligence.

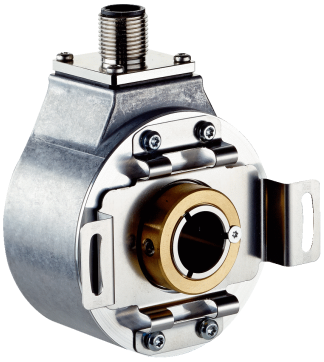

Illustration may differ

## Ordering information

| Type | part no. |
|---|---|
| DBS60E-T5ECB0512 | 1108420 |

Other models and accessories ➜ www.sick.com/DBS60

## Detailed technical data

### Safety-related parameters

| | |
|---|---|
| **$MTTF_D$ (mean time to dangerous failure)** | 500 years (EN ISO 13849-1) [1] |

[1] This product is a standard product and does not constitute a safety component as defined in the Machinery Directive. Calculation based on nominal load of components, average ambient temperature 40 °C, frequency of use 8760 h/a. All electronic failures are considered hazardous. For more information, see document no. 8015532.

### Performance

| | |
|---|---|
| **Pulses per revolution** | 512 |
| **Measuring step** | ≤ 90 °, electric/pulses per revolution |
| **Measuring step deviation** | ± 18 ° / pulses per revolution |
| **Error limits** | Measuring step deviation x 3 |
| **Duty cycle** | ≤ 0.5 ± 5 % |

### Interfaces

| | |
|---|---|
| **Communication interface** | Incremental |
| **Communication Interface detail** | HTL / Push pull |
| **Number of signal channels** | 6-channel |
| **Initialization time** | < 5 ms [1] |
| **Output frequency** | + 300 kHz [2] |
| **Load current** | ≤ 30 mA, per channel |
| **Power consumption** | ≤ 1 W (without load) |

[1] Valid signals can be read once this time has elapsed.
[2] Up to 450 kHz on request.

### Electronics

| | |
|---|---|
| **Connection type** | Male connector, M12, 8-pin, radial |

[1] Short-circuit opposite to another channel, US or GND permissable for maximum 30 s.

| | |
|---|---|
| **Supply voltage** | 10 ... 27 V |
| **Reference signal, number** | 1 |
| **Reference signal, position** | 90°, electric, logically gated with A and B |
| **Reverse polarity protection** | ✓ |
| **Short-circuit protection of the outputs** | ✓ [1] |

[1] Short-circuit opposite to another channel, US or GND permissable for maximum 30 s.

## Mechanics

| | |
|---|---|
| **Mechanical design** | Through hollow shaft |
| **Shaft diameter** | 12 mmShaft isolated |
| **Flange type / stator coupling** | Stator coupling, 2-sided, screw hole circle 63 mm |
| **Weight** | + 0.25 kg [1] |
| **Shaft material** | Stainless steel |
| **Flange material** | Aluminum |
| **Housing material** | Aluminum |
| **Start up torque** | + 0.5 Ncm (+20 °C) |
| **Operating torque** | 0.4 Ncm (+20 °C) |
| **Permissible movement static** | ± 0.3 mm (radial)<br>± 0.5 mm (axial) [2] |
| **Permissible movement dynamic** | ± 0.1 mm (radial)<br>± 0.2 mm (axial) [2] |
| **Operating speed** | 6,000 $min^{-1}$ [3] |
| **Maximum operating speed** | 9,000 $min^{-1}$ [4] |
| **Moment of inertia of the rotor** | 50 $gcm^2$ |
| **Bearing lifetime** | 3.6 x $10^9$ revolutions |
| **Angular acceleration** | ≤ 200,000 $rad/s^2$ |

[1] Based on encoder with male connector or cable with male connector.

[2] Not apllicable for stator coupling type C and K.

[3] Allow for self-heating of 2.6 K per 1,000 rpm when designing the operating temperature range.

[4] Maximum speed which does not cause mechanical damage to the encoder. Impact on the service life and signal quality is possible. Please note the maximum output frequency.

## Ambient data

| | |
|---|---|
| **EMC** | According to EN 61000-6-2 and EN 61000-6-3 |
| **Enclosure rating** | IP65, housing side (IEC 60529) [1]<br>IP65, shaft side (IEC 60529) |
| **Permissible relative humidity** | 90 % (Condensation not permitted) |
| **Operating temperature range** | –20 °C ... +85 °C [2] |
| **Storage temperature range** | –40 °C ... +100 °C, without package |
| **Resistance to shocks** | 200 g, 3 ms (EN 60068-2-27) |
| **Resistance to vibration** | 30 g, 10 Hz ... 2,000 Hz (EN 60068-2-6) |

[1] With mating connector fitted.

[2] These values relate to all mechanical versions including recommended accessories unless otherwise noted.

## Certificates

| | |
|---|---|
| **EU declaration of conformity** | ✓ |
| **UK declaration of conformity** | ✓ |
| **ACMA declaration of conformity** | ✓ |
| **China-RoHS** | ✓ |
| **cULus certificate** | ✓ |
| **Information according to Art. 3 of Data Act (Regulation EU 2023/2854)** | ✓ |

## Classifications

| | |
|---|---|
| **ECLASS 5.0** | 27270501 |
| **ECLASS 5.1.4** | 27270501 |
| **ECLASS 6.0** | 27270590 |
| **ECLASS 6.2** | 27270590 |
| **ECLASS 7.0** | 27270501 |
| **ECLASS 8.0** | 27270501 |
| **ECLASS 8.1** | 27270501 |
| **ECLASS 9.0** | 27270501 |
| **ECLASS 10.0** | 27270501 |
| **ECLASS 11.0** | 27270501 |
| **ECLASS 12.0** | 27270501 |
| **ETIM 5.0** | EC001486 |
| **ETIM 6.0** | EC001486 |
| **ETIM 7.0** | EC001486 |
| **ETIM 8.0** | EC001486 |
| **UNSPSC 16.0901** | 41112113 |

## Dimensional drawing

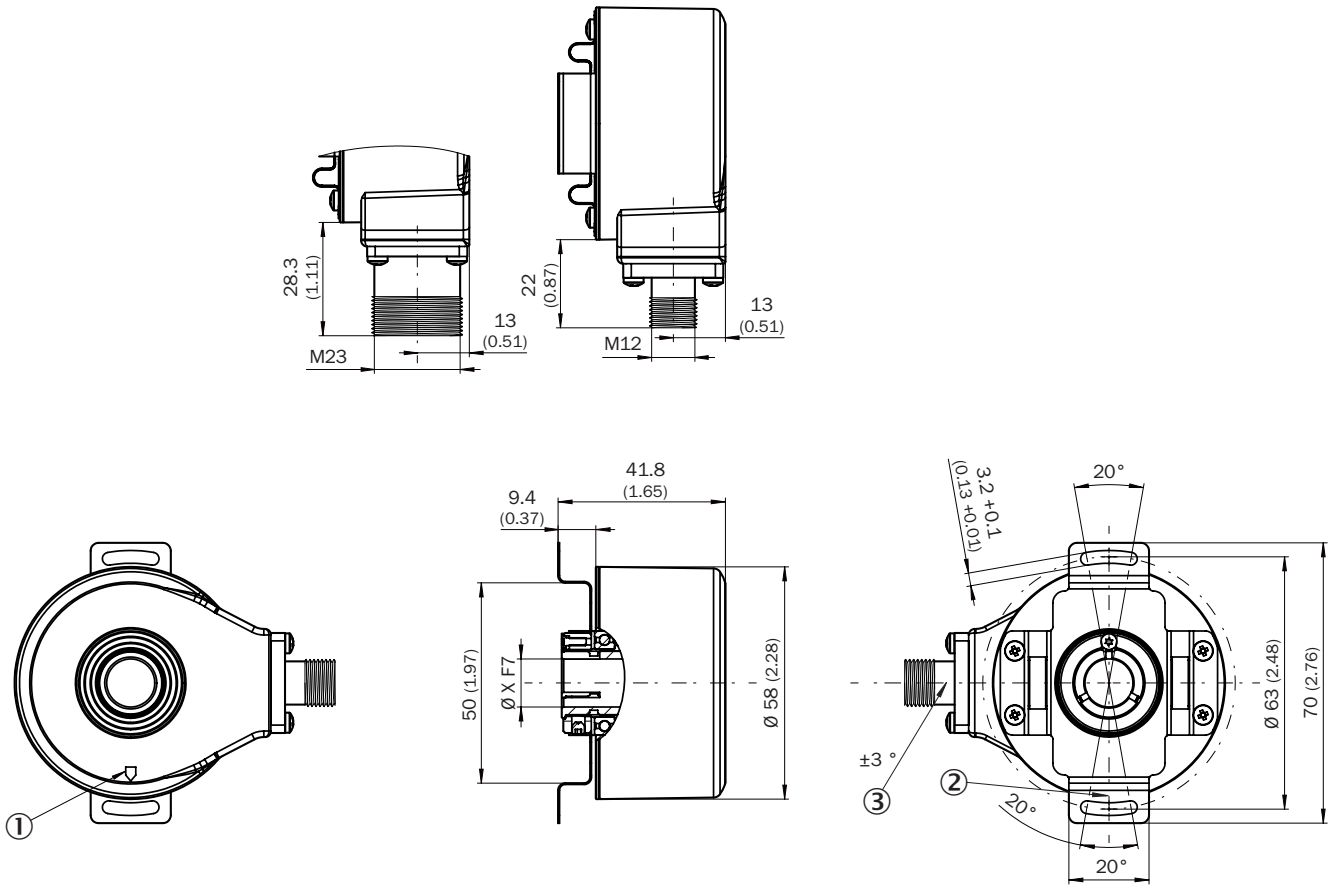


Dimensions in mm (inch)
XF7 values see shaft diameter table for through hollow shaft, clamping at the front
① Zero pulse mark on housing
② zero pulse mark on flange under stator coupling
③ male connector tolerance in relation to hole pattern

| TypeThrough hollow shaft with front clamping | Shaft diameter XF7 |
|---|---|
| DBS60x-TAxxxxxxxxDBS60x-T1xxxxxxxx | 6 mm |
| DBS60x-TBxxxxxxxxDBS60x-T2xxxxxxxx | 8 mm |
| DBS60x-TCxxxxxxxxDBS60x-T3xxxxxxxx | 3/8″ |
| DBS60x-TDxxxxxxxxDBS60x-T4xxxxxxxx | 10 mm |
| DBS60x-TExxxxxxxxDBS60x-T5xxxxxxxx | 12 mm |
| DBS60x-TFxxxxxxxxDBS60x-T6xxxxxxxx | 1/2″ |
| DBS60x-TGxxxxxxxxDBS60x-T7xxxxxxxx | 14 mm |
| DBS60x-THxxxxxxxxDBS60x-T8xxxxxxxx | 15 mm |
| DBS60x-TJxxxxxxxx | 5/8″ |

–

## Attachment specifications Through hollow shaft with front clamping

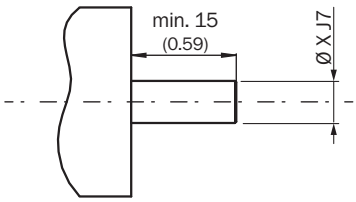


customer side

| TypeThrough hollow shaft with front clamping | Shaft diameter xj7 |
|---|---|
| DBS60x-TAxxxxxxxxDBS60x-T1xxxxxxxx | 6 mm |
| DBS60x-TBxxxxxxxxDBS60x-T2xxxxxxxx | 8 mm |
| DBS60x-TCxxxxxxxxDBS60x-T3xxxxxxxx | 3/8″ |
| DBS60x-TDxxxxxxxxDBS60x-T4xxxxxxxx | 10 mm |
| DBS60x-TExxxxxxxxDBS60x-T5xxxxxxxx | 12 mm |
| DBS60x-TFxxxxxxxxDBS60x-T6xxxxxxxx | 1/2″ |
| DBS60x-TGxxxxxxxxDBS60x-T7xxxxxxxx | 14 mm |
| DBS60x-THxxxxxxxxDBS60x-T8xxxxxxxx | 15 mm |
| DBS60x-TJxxxxxxxx | 5/8″ |
| – | |

## PIN assignment

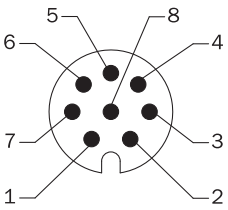


view of M12 male device connector on cable / housing

| Wire colors (cable connection) | Male connector M12, 8-pin | Male connector M23, 12-pin | TTL/HTL 6-channel signal | Explanation |
|---|---|---|---|---|
| Brown | 1 | 6 | A- | Signal wire |
| White | 2 | 5 | A | Signal wire |
| Black | 3 | 1 | B- | Signal wire |
| Pink | 4 | 8 | B | Signal wire |
| Yellow | 5 | 4 | Z- | Signal wire |
| Purple | 6 | 3 | Z | Signal wire |
| Blue | 7 | 10 | GND | Ground connection |
| Red | 8 | 12 | $+U_S$ | Supply voltage |
| - | - | 9 | Not assigned | Not assigned |
| - | - | 2 | Not assigned | Not assigned |
| - | - | 11 | Not assigned | Not assigned |
| - | - | 7 | Not assigned | Not assigned |

| Wire colors (cable connection) | Male connector M12, 8-pin | Male connector M23, 12-pin | TTL/HTL 6-channel signal | Explanation |
|---|---|---|---|---|
| Screen | Screen | Screen | Screen | Screen connected to encoder housing |

## Diagrams

Pulses per revolution

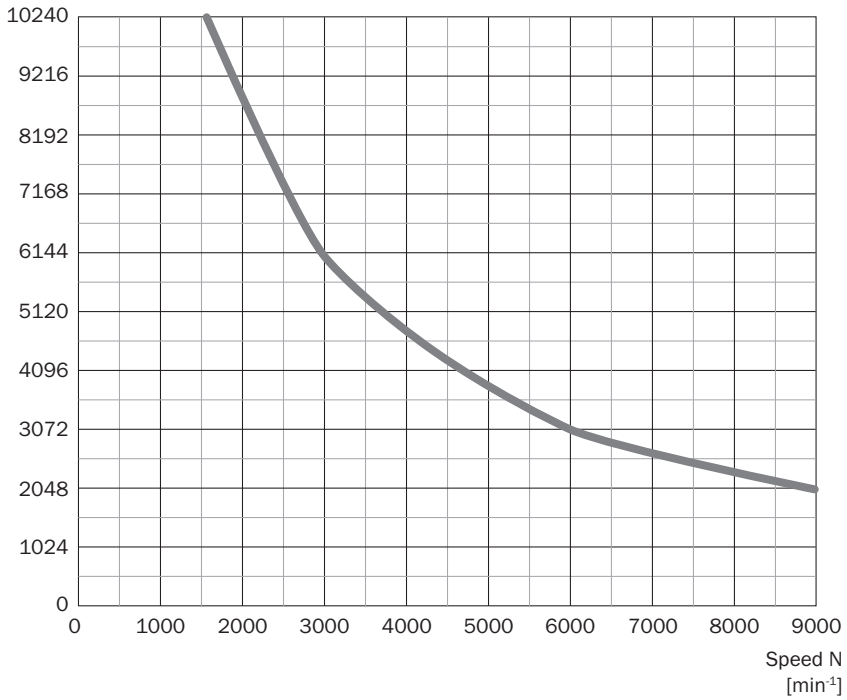

## Diagrams Signal outputs for electrical interfaces TTL and HTL

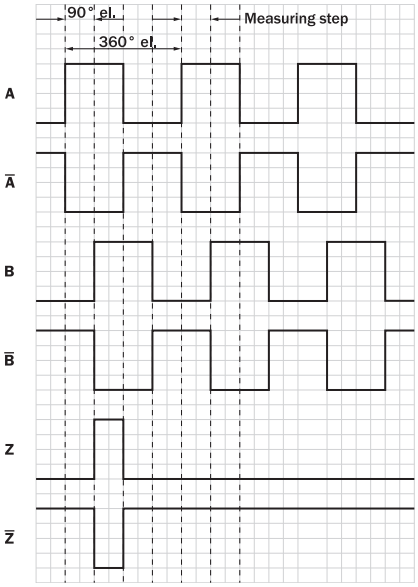


Cw with view on the encoder shaft in direction "A", compare dimensional drawing.

| Supply voltage | Output |
|---|---|
| 4,5 V ... 5,5 V | TTL |
| 10 V ... 30 V | TTL |
| 10 V ... 27 V | HTL |
| 4,5 V ... 30 V | TTL/HTL universal |
| 4,5 V ... 30 V | TTL |

## Operation note Hollow shaft

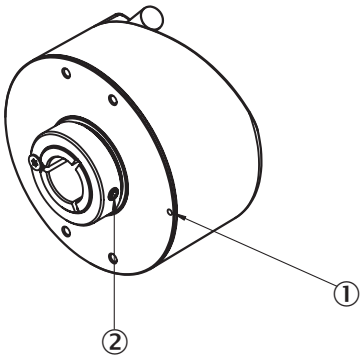


Attention! If stator coupling is mounted, the zero pulse mark can be hidden by the stator coupling
① Zero pulse mark on flange
② Zero pulse is active when screw of clamping is inline with zero pulse mark on flange or housing mark

## Recommended accessories

Other models and accessories ➜ www.sick.com/DBS60

| | Brief description | Type | part no. |
|---|---|---|---|
| connectors and cables | | | |
|  | • **Connection type head A:** Flying leads<br>• **Connection type head B:** Flying leads<br>• **Signal type:** SSI, Incremental, HIPERFACE®<br>• **Items supplied:** By the meter<br>• **Cable:** 8-wire, PUR, halogen-free<br>• **Description:** SSI, shielded, Incremental, HIPERFACE® | LTG-2308-MWENC | 6027529 |
|  | • **Connection type head A:** Flying leads<br>• **Connection type head B:** Flying leads<br>• **Signal type:** SSI, Incremental<br>• **Items supplied:** By the meter<br>• **Cable:** 11-wire, PUR<br>• **Description:** SSI, shielded, Incremental | LTG-2411-MW | 6027530 |
|  | • **Connection type head A:** Flying leads<br>• **Connection type head B:** Flying leads<br>• **Signal type:** SSI, Incremental<br>• **Items supplied:** By the meter<br>• **Cable:** 12-wire, PUR, halogen-free<br>• **Description:** SSI, shielded, Incremental | LTG-2512-MW | 6027531 |
|  | • **Connection type head A:** Flying leads<br>• **Connection type head B:** Flying leads<br>• **Signal type:** SSI, TTL, HTL, Incremental<br>• **Items supplied:** By the meter<br>• **Cable:** 12-wire, UV and saltwater-resistant, PUR, halogen-free<br>• **Description:** SSI, shielded, TTL, HTL, Incremental | LTG-2612-MW | 6028516 |
|  | • **Connection type head A:** Female connector, M12, 8-pin, straight<br>• **Connection type head B:** Flying leads<br>• **Signal type:** Incremental, SSI<br>• **Cable:** 2 m, 8-wire, PUR, halogen-free<br>• **Description:** Incremental, shieldedSSI<br>• **Connection systems:** Flying leads | DOL-1208-G02MAC1 | 6032866 |
|  | • **Connection type head A:** Female connector, M12, 8-pin, straight<br>• **Connection type head B:** Flying leads<br>• **Signal type:** Incremental, SSI<br>• **Cable:** 5 m, 8-wire, PUR, halogen-free<br>• **Description:** Incremental, shieldedSSI<br>• **Connection systems:** Flying leads | DOL-1208-G05MAC1 | 6032867 |
|  | • **Connection type head A:** Female connector, M12, 8-pin, straight<br>• **Connection type head B:** Flying leads<br>• **Signal type:** Incremental, SSI<br>• **Cable:** 10 m, 8-wire, PUR, halogen-free<br>• **Description:** Incremental, shieldedSSI<br>• **Connection systems:** Flying leads | DOL-1208-G10MAC1 | 6032868 |
|  | • **Connection type head A:** Female connector, M12, 8-pin, straight<br>• **Connection type head B:** Flying leads<br>• **Signal type:** Incremental, SSI<br>• **Cable:** 20 m, 8-wire, PUR, halogen-free<br>• **Description:** Incremental, shieldedSSI<br>• **Connection systems:** Flying leads | DOL-1208-G20MAC1 | 6032869 |
|  | • **Connection type head A:** Female connector, M12, 8-pin, straight<br>• **Connection type head B:** Flying leads<br>• **Signal type:** Incremental, SSI<br>• **Cable:** 25 m, 8-wire, PUR, halogen-free<br>• **Description:** Incremental, shieldedSSI<br>• **Connection systems:** Flying leads | DOL-1208-G25MAC1 | 6067859 |
|  | • **Connection type head A:** Female connector, M12, 8-pin, straight, A-coded<br>• **Signal type:** Incremental, SSI<br>• **Cable:** CAT5, CAT5e<br>• **Description:** Incremental, shieldedSSI<br>• **Connection systems:** IDC quick connection<br>• **Permitted cross-section:** 0.14 mm² ... 0.34 mm² | DOS-1208-GA01 | 6045001 |
|  | • **Connection type head A:** Female connector, M12, 8-pin, straight, A-coded<br>• **Connection type head B:** Male connector, M12, 8-pin, straight, A-coded<br>• **Cable:** 20 m, 8-wire, PUR, halogen-free<br>• **Description:** Shielded | YF2AA8-200S01M-KA18 | 2099208 |

| | Brief description | Type | part no. |
|---|---|---|---|
| | • **Permitted cross-section:** ≤ 0.25 mm²<br>• **Note:** Drag chain use<br>• **Application:** Drag chain operation | | |
|  | • **Connection type head A:** Female connector, M12, 8-pin, straight, A-coded<br>• **Connection type head B:** Male connector, M12, 8-pin, straight, A-coded<br>• **Cable:** 2 m, 8-wire, PUR, halogen-free<br>• **Description:** Shielded<br>• **Permitted cross-section:** ≤ 0.25 mm²<br>• **Note:** Drag chain use<br>• **Application:** Drag chain operation | YF2AA8-020S01M-KA18 | 2099207 |
|  | • **Connection type head A:** Female connector, M12, 8-pin, straight, A-coded<br>• **Connection type head B:** Male connector, M12, 8-pin, straight, A-coded<br>• **Cable:** 5 m, 8-wire, PUR, halogen-free<br>• **Description:** Shielded<br>• **Permitted cross-section:** ≤ 0.25 mm²<br>• **Note:** Drag chain use<br>• **Application:** Drag chain operation | YF2AA8-050S01M-KA18 | 2099209 |
|  | • **Connection type head A:** Female connector, M12, 8-pin, straight, A-coded<br>• **Connection type head B:** Male connector, M12, 8-pin, straight, A-coded<br>• **Cable:** 10 m, 8-wire, PUR, halogen-free<br>• **Description:** Shielded<br>• **Permitted cross-section:** ≤ 0.25 mm²<br>• **Note:** Drag chain use<br>• **Application:** Drag chain operation | YF2AA8-100S01M-KA18 | 2099210 |
|  | • **Connection type head A:** Female connector, M12, 8-pin, angled<br>• **Connection type head B:** Flying leads<br>• **Signal type:** HIPERFACE®, Incremental<br>• **Cable:** 2 m, 8-wire, PUR, halogen-free<br>• **Description:** HIPERFACE®, shieldedIncremental | DOL-1208-W02MAC1 | 6037724 |
|  | • **Connection type head A:** Female connector, M12, 8-pin, angled<br>• **Connection type head B:** Flying leads<br>• **Signal type:** HIPERFACE®, Incremental<br>• **Cable:** 5 m, 8-wire, PUR, halogen-free<br>• **Description:** HIPERFACE®, shieldedIncremental | DOL-1208-W05MAC1 | 6037725 |
|  | • **Connection type head A:** Female connector, M12, 8-pin, angled<br>• **Connection type head B:** Flying leads<br>• **Signal type:** HIPERFACE®, Incremental<br>• **Cable:** 10 m, 8-wire, PUR, halogen-free<br>• **Description:** HIPERFACE®, shieldedIncremental | DOL-1208-W10MAC1 | 6037726 |
|  | • **Connection type head A:** Female connector, M12, 8-pin, angled<br>• **Connection type head B:** Flying leads<br>• **Signal type:** HIPERFACE®, Incremental<br>• **Cable:** 20 m, 8-wire, PUR<br>• **Description:** HIPERFACE®, shieldedIncremental | DOL-1208-W20MAC1 | 6037727 |
|  | • **Connection type head A:** Female connector, M12, 8-pin, angled<br>• **Connection type head B:** Flying leads<br>• **Cable:** 2 m, 8-wire, PVC<br>• **Description:** Shielded<br>• **Connection systems:** Flying leads | DOL-1208-W02MA | 6020992 |
|  | • **Connection type head A:** Female connector, M12, 8-pin, angled<br>• **Connection type head B:** Flying leads<br>• **Signal type:** Sensor/actuator cable<br>• **Cable:** 2 m, 8-wire, PUR, halogen-free<br>• **Description:** Sensor/actuator cable, shielded<br>• **Connection systems:** Flying leads | DOL-1208-W02MAS01 | 6029224 |
|  | • **Connection type head A:** Female connector, M12, 8-pin, angled<br>• **Connection type head B:** Flying leads<br>• **Cable:** 2 m, 8-wire, PUR, halogen-free<br>• **Description:** Unshielded | DOL-1208-W02MC | 6035623 |
|  | • **Connection type head A:** Female connector, M12, 8-pin, angled<br>• **Connection type head B:** Flying leads<br>• **Cable:** 5 m, 8-wire, PVC<br>• **Description:** Shielded | DOL-1208-W05MA | 6021033 |

| | Brief description | Type | part no. |
|---|---|---|---|
| | • **Connection systems:** Flying leads | | |
|  | • **Connection type head A:** Female connector, M12, 8-pin, angled<br>• **Connection type head B:** Flying leads<br>• **Cable:** 5 m, 8-wire, PUR<br>• **Description:** Unshielded | DOL-1208-W05MC | 6035624 |
|  | • **Connection type head A:** Female connector, M12, 8-pin, angled<br>• **Connection type head B:** Flying leads<br>• **Cable:** 10 m, 8-wire, PUR, halogen-free<br>• **Description:** Unshielded | DOL-1208-W10MC | 6035625 |

# SICK AT A GLANCE

SICK is one of the leading manufacturers of intelligent sensors and sensor solutions for industrial applications. A unique range of products and services creates the perfect basis for controlling processes securely and efficiently, protecting individuals from accidents and preventing damage to the environment.

We have extensive experience in a wide range of industries and understand their processes and requirements. With intelligent sensors, we can deliver exactly what our customers need. In application centers in Europe, Asia and North America, system solutions are tested and optimized in accordance with customer specifications. All this makes us a reliable supplier and development partner.

Comprehensive services complete our offering: SICK LifeTime Services provide support throughout the machine life cycle and ensure safety and productivity.

**For us, that is “Sensor Intelligence.”**

# WORLDWIDE PRESENCE:

Contacts and other locations –www.sick.com