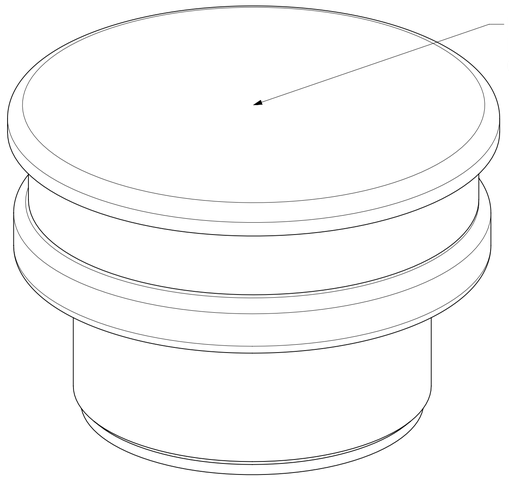

RECOMMENDED PCB LAYOUT

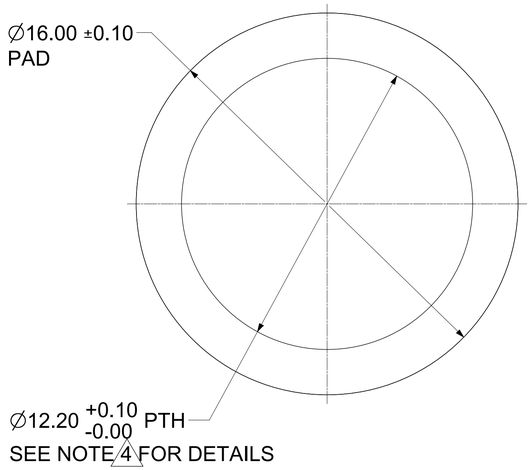

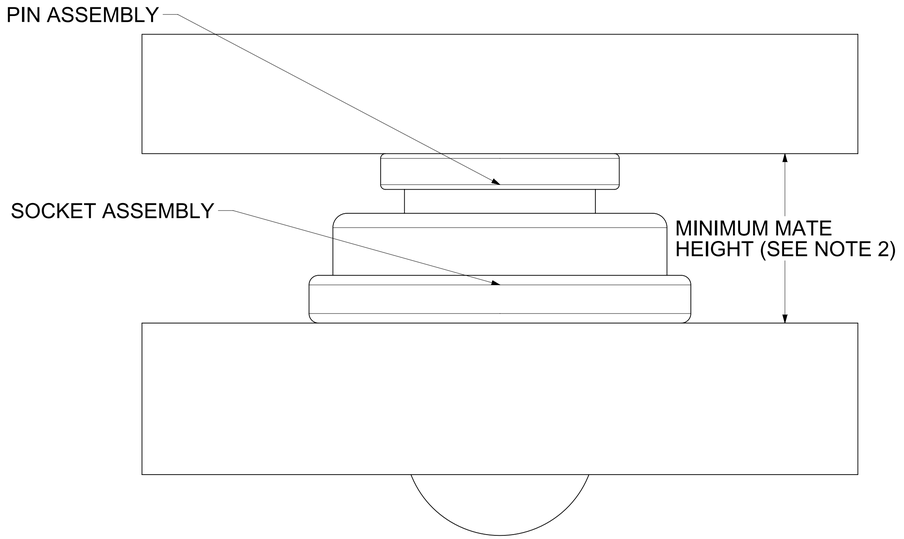

MATING PROFILE

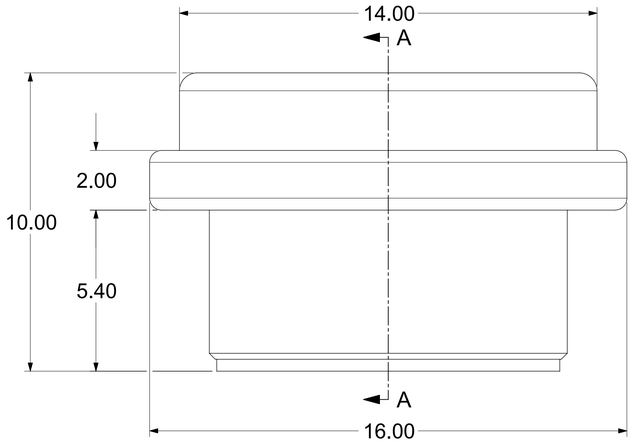

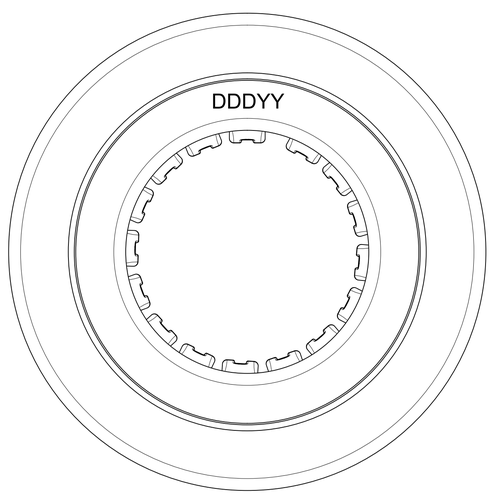

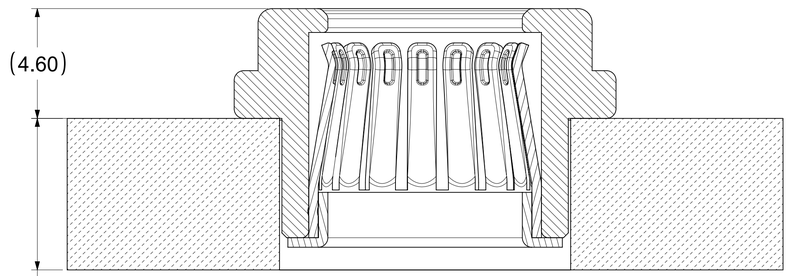

SECTION A-A

NOTES:
1. MATERIALS:
   RETENTION CAP: STAINLESS STEEL
   PICK AND PLACE CAP: LCP UL94, V-0 COLOR BLACK
   BASE METAL: HIGH CONDUCTIVE COPPER ALLOY
   PLATING ON CONTACTS: 0.75 MICRON MIN GOLD OVER 1.27 MICRON MIN NICKEL
   PLATING ON BODY: 3.18 MICRON MIN SILVER OVER 1.27 MICRON MIN NICKEL
2. MATES WITH STANDARD PIN DRAWINGS:
   i. 8.0MM SMT DRAWING 2032633080-SD, MIN. MATING DISTANCE 6.75MM
   ii. 8.0MM PRESS FIT DRAWING 2032630001-SD, MIN. MATING DISTANCE 7.1MM
   iii. 8.0MM SCREW MOUNT DRAWING 2032634185-SD, MIN. MATING DISTANCE 10.1MM
3. PRODUCT SPECIFICATION: 2043130001-PS
4. APPLICATION SPECIFICATION: 2043130001-AS.
   SEE APPLICATION SPEC FOR SOLDERING INFORMATION.
5. PACKAGING SPECIFICATION: 2043180001-PK.
6. SILVER COMPONENTS WILL BE SUPPLIED TARNISH FREE
   BUT MAY TARNISH OVER TIME.
7. PICK AND PLACE CAP TO BE REMOVED AFTER SOLDERING
8. DATE CODE TO BE LASER MARKED APPROXIMATELY WHERE SHOWN
   USING DDDYY FORMAT

THIS DRAWING CONTAINS INFORMATION THAT IS PROPRIETARY TO MOLEX ELECTRONIC TECHNOLOGIES, LLC AND SHOULD NOT BE USED WITHOUT WRITTEN PERMISSION

DIMENSION UNITS	SCALE
mm	NTS

GENERAL TOLERANCES (UNLESS SPECIFIED)

ANGULAR TOL	±	0.5 °
4 PLACES	±	
3 PLACES	±	
2 PLACES	±	0.15
1 PLACE	±	0.25
0 PLACES	±	

DRAFT WHERE APPLICABLE MUST REMAIN WITHIN DIMENSIONS

CURRENT REV DESC: UPDATED THE TITLE BLOCK

EC NO: 747243
DRWN: SACHIK7 2023/02/28
CHK'D: SCS02 2023/04/25
APPR: HTHYAGARAJ 2023/04/26

INITIAL REVISION:
DRWN: TOMLU 2017/03/10
APPR: JJONIAK 2018/06/14

THIRD ANGLE PROJECTION | DRAWING: D-SIZE | SERIES: 204318

molex

8.0MM SENTRALITY TOP ENTRY SMT
STANDARD SOCKET IN TRAY

PRODUCT CUSTOMER DRAWING

DOCUMENT NUMBER	DOC TYPE	DOC PART	REVISION
2043180001-SD	PSD	000	B2

MATERIAL NUMBER	CUSTOMER	SHEET NUMBER
2043180001	GENERAL MARKET	1 OF 1

DOCUMENT STATUS	P1	RELEASE DATE	2023/05/08 05:38:44