Data sheet



SLG50S-020FAKB1K01

FlexChain

AUTOMATION LIGHT GRIDS

SICK
Sensor Intelligence.



Illustration may differ

Ordering information

Type	part no.
SLG50S-020FAKB1K01	1108004

Other models and accessories ➜ www.sick.com/FlexChain

Detailed technical data

Features

Device version	FlexChain Guest
Sensor principle	Sender/receiver Light grid system
Minimum detectable object (MDO)	55 mm
Beam separation	50 mm
Optical light exit	Flat
Number of beams	4
Detection height	200 mm

Mechanics/electronics

Light source	Infrared light
Wave length	850 nm
Supply voltage V_S	Via FlexChain (host)
Output load, capacitive	100 nF
Output load, Inductive	1 H
Initialization time	1 s
Dimensions (W x H x D)	11.8 mm x 199.2 mm x 24.1 mm
Connection type	Cable with M8 male connector, 4-pin, Cable with female connector, M8, 4-pin, 1.5 m
Indication	LED
Synchronization	Via FlexChain (host)
Enclosure rating	IP65, IP67 [1)]
Circuit protection	U_V connections, reverse polarity protected Interference pulse suppression Outputs overcurrent and short-circuit protected

[1)] Operating in outdoor condition only with a external protection housing.

Protection class	III
Weight	206 g
Front screen	PMMA

[1] Operating in outdoor condition only with a external protection housing.

Performance

Maximum range	6 m
Minimum range	≥ 0 m
Operating range	4 m
Scanning time	0.4 ms

Ambient data

Shock resistance	10 g, 16 ms, DIN EN 60068-2-27
Vibration resistance	10-150 Hz 0.5 mm, IEC 60068-2-6
EMC	EN 61000-6-2, EN 61000-6-4
Ambient light immunity	Indirect: 50,000 lx [1]
Ambient operating temperature	–25 °C ... +55 °C
Ambient temperature, storage	–25 °C ... +70 °C

[1] Sunlight.

Certificates

EU declaration of conformity	✓
UK declaration of conformity	✓
ACMA declaration of conformity	✓
Moroccan declaration of conformity	✓
China-RoHS	✓
cULus certificate	✓
Photobiological safety (IEC EN 62471)	✓

Classifications

ECLASS 5.0	27270910
ECLASS 5.1.4	27270910
ECLASS 6.0	27270910
ECLASS 6.2	27270910
ECLASS 7.0	27270910
ECLASS 8.0	27270910
ECLASS 8.1	27270910
ECLASS 9.0	27270910
ECLASS 10.0	27270910
ECLASS 11.0	27270910
ECLASS 12.0	27270910
ETIM 5.0	EC002549
ETIM 6.0	EC002549

ETIM 7.0	EC002549
ETIM 8.0	EC002549
UNSPSC 16.0901	39121528

Dimensional drawing SLGxxx-xxxFxxxxxx

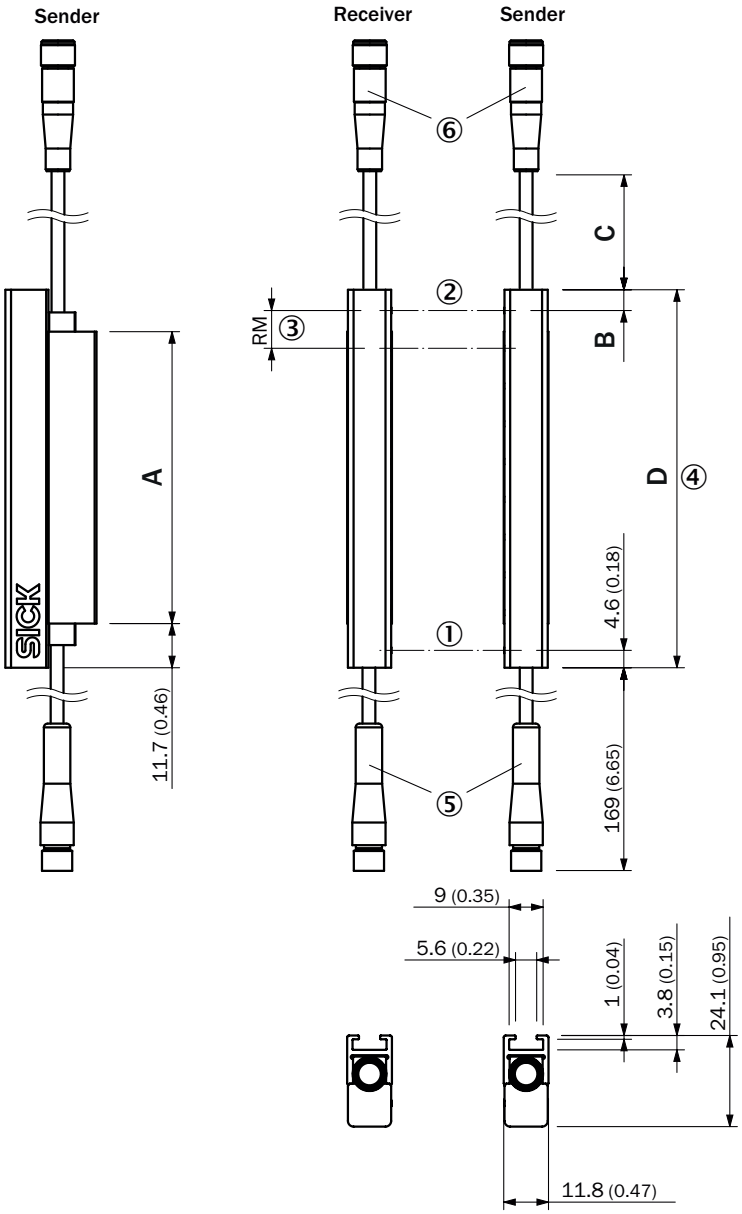

Dimensions in mm (inch)
① First beam
② last beam
③ beam separation (RM)
④ Housing length
⑤ cable with male connector, M8, 4-pin (fixed)
⑥ cable with female connector, M8, 4-pin (0.5 m / 1.5 m)

Dimensions in mm (inch)		
–	Length of stabilizer	Housing length
	A	**D**
SLGxxx-**0 10**xxxxxxxx	77 (3.03)	99,2 (3.91)
SLGxxx-**02 0**xxxxxxxx	178 (7.01)	199,2 (7.84)
SLGxxx-**03 0**xxxxxxxx	276 (10.87)	299,2 (11.78)
SLGxxx-**04 0**xxxxxxxx	376 (14.8)	399,2 (15.72)
SLGxxx-**05 0**xxxxxxxx	475 (18.7)	499,2 (19.65)
SLGxxx-**06 0**xxxxxxxx	576 (22.68)	599,2 (23.6)
SLGxxx-**07 0**xxxxxxxx	676 (26.61)	699,2 (27.53)
SLGxxx-**08 0**xxxxxxxx	776 (30.55)	799,2 (31.46)
SLGxxx-**09 0**xxxxxxxx	875 (34.45)	899,2 (35.4)
SLGxxx-**100**xxxxxxxx	975 (38.39)	999,2 (39.34)
SLGxxx-**120**xxxxxxxx	1.175 (46.26)	1.199,2 (47.21)
SLGxxx-**140**xxxxxxxx	1.374 (54,09)	1.399,2 (55.09)
	–	
–	Distance: Housing edge - last beam	–
	B [1]	
SLG**10**x-xxxxxxxxxx	4,6 (0.18)	
SLG**25**x-xxxxxxxxxx	19,6 (0.77)	
SLG**50**x-xxxxxxxxxx	44,6 (1.76)	
[1] for detection height less than 700 mm, the dimension deviates up to 1 mm from the dimensions specified here.		
	–	
–	Length of cable	–
	C	
SLGxxx-xxxxx**A**xxxx	500 (19.69)	
SLGxxx-xxxxx**B**xxxx	1.500 (59.06)	

Connection type and diagram

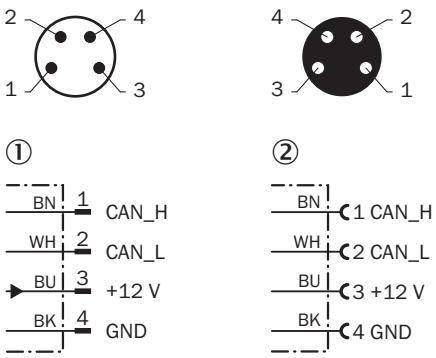

① male connector M8, 4-pin
② Cable with female connector, M8, 4-pin

Instruction for installation Slim & Flat



① Slim model = light emission on narrow side
② Flat model = light emission on broad side

Recommended accessories

Other models and accessories ➜ www.sick.com/FlexChain

	Brief description	Type	part no.
Mounting systems			
	• **Description:** Mounting bracket for switching automation light grids, SLG-2 • **Packing unit:** 4 pieces	BEF-SLG2-SET1	2111623
	• **Description:** Side mounting for switching automation light grids, SLG-2 • **Packing unit:** 4 pieces	BEF-NUT-SLG2	2111624

SICK AT A GLANCE

SICK is one of the leading manufacturers of intelligent sensors and sensor solutions for industrial applications. A unique range of products and services creates the perfect basis for controlling processes securely and efficiently, protecting individuals from accidents and preventing damage to the environment.

We have extensive experience in a wide range of industries and understand their processes and requirements. With intelligent sensors, we can deliver exactly what our customers need. In application centers in Europe, Asia and North America, system solutions are tested and optimized in accordance with customer specifications. All this makes us a reliable supplier and development partner.

Comprehensive services complete our offering: SICK LifeTime Services provide support throughout the machine life cycle and ensure safety and productivity.

For us, that is “Sensor Intelligence.”

WORLDWIDE PRESENCE:

Contacts and other locations –www.sick.com