

Inductive sensor

NBN3-F31K2-Z8L-B13-S

- Direct mounting on standard actuators
- Compatible with all process control systems
- Weatherproof housing for outdoor applications
- Temperature range -40 ... 167 °F (-40°C to 75°C)
- 2-wire DC sensor with minimum off-state current
- LEDs for switching state of sensor and solenoid valve
- Plug-in terminals

Installation

The connections to this sensor are sealed with stopping plugs to protect against dirt and moisture. If not all of the connections are used in your application, then seal the remaining stopping plugs on the sensor permanently or check during initial installation and when performing regular maintenance work that the stopping plugs are secure and impermeable. If necessary, tighten the stopping plugs to a torque of 1 Nm.

Dimensions

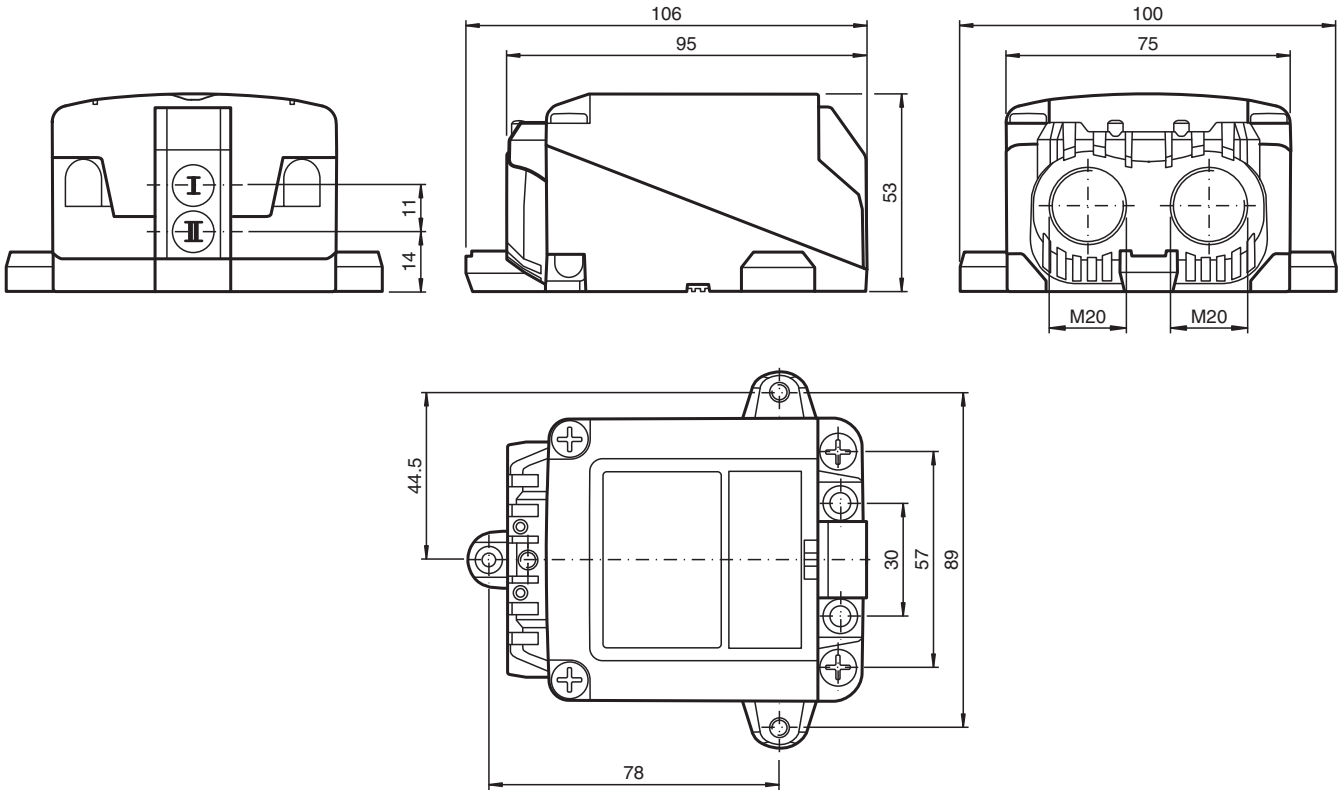

Technical Data

General specifications		
Switching function		2 x normally open (NO)
Output type		Two-wire with minimum off-state current
Rated operating distance	s_n	2.5 mm

Release date: 2025-07-02 Date of issue: 2025-07-02 Filename: 235082_eng.pdf

Technical Data

Installation		for non-flush mounting
Output polarity		DC
Assured operating distance	s_a	0 ... 2.05 mm
Output type		2x 2-wire
Nominal ratings		
Operating voltage	U_B	6 ... 30 V
Switching frequency	f	0 ... 100 Hz
Hysteresis	H	typ. 0.5 mm
Reverse polarity protection		reverse polarity tolerant
Short-circuit protection		no
Voltage drop	U_d	≤ 6 V
Operating current	I_L	4 ... 100 mA
Off-state current	I_r	100 ... 200 µA typ. 160 µA
Switching state indicator		LED, yellow
Valve status indicator		LED, yellow
Functional safety related parameters		
$MTTF_d$		684 a
Mission Time (T_M)		20 a
Diagnostic Coverage (DC)		0 %
Valve circuit		
Voltage		max. 32 V DC
Current		max. 240 mA
Short-circuit protection		no
Reverse polarity protection		yes, with reversed output LED is out of function, therfore more power for solenoid valve
Compliance with standards and directives		
Standard conformity		
Standards		EN IEC 60947-5-2
Approvals and certificates		
UL approval		cULus Listed Load Type: General Purpose Circuitry: Class 2 Power Source Enclosure Type Rating: Type 1 Supply/Switching Voltage: 30 V DC Output Switching Current: 100 mA
Ambient conditions		
Ambient temperature		-40 ... 75 °C (-40 ... 167 °F)
Storage temperature		-40 ... 85 °C (-40 ... 185 °F)
Mechanical specifications		
Connection (system side)		screw terminal , M20 x 1.5 cable gland
Core cross section (system side)		1.5/2.5 mm^2 flexible/rigid
Connection (valve side)		screw terminal , Cable gland M20 x 1.5
Housing material		rugged, translucent polycarbonate (PC) optimised for outdoor use
Housing base		PC
Degree of protection		IP66 / IP68 / IP69
Tightening torque, fastening screws		≤ 5 Nm
Tightening torque, housing screws		1.5 Nm
Tightening torque, cable gland		M20 x 1.5 ; max. 7 Nm
Tightening torque, stopping plug		1 Nm
Dimensions		
Height		53 mm
Width		100 mm
Length		106 mm

Release date: 2025-07-02 Date of issue: 2025-07-02 Filename: 235082_eng.pdf

Connection Assignment

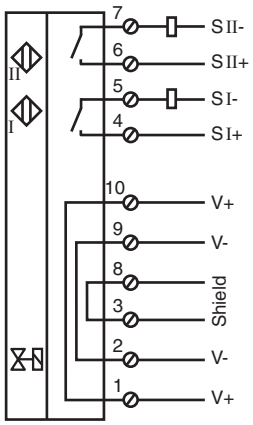

Release date: 2025-07-02 Date of issue: 2025-07-02 Filename: 235082_eng.pdf