THIS DRAWING IS UNPUBLISHED. RELEASED FOR PUBLICATION
© COPYRIGHT BY TYCO ELECTRONICS CORPORATION. ALL RIGHTS RESERVED.

LOC	DIST
AJ	16

REVISIONS

P	LTR	DESCRIPTION	DATE	DWN	APVD
	0	RLS PER 0S14-0496-05	18FEB05	KW	KW

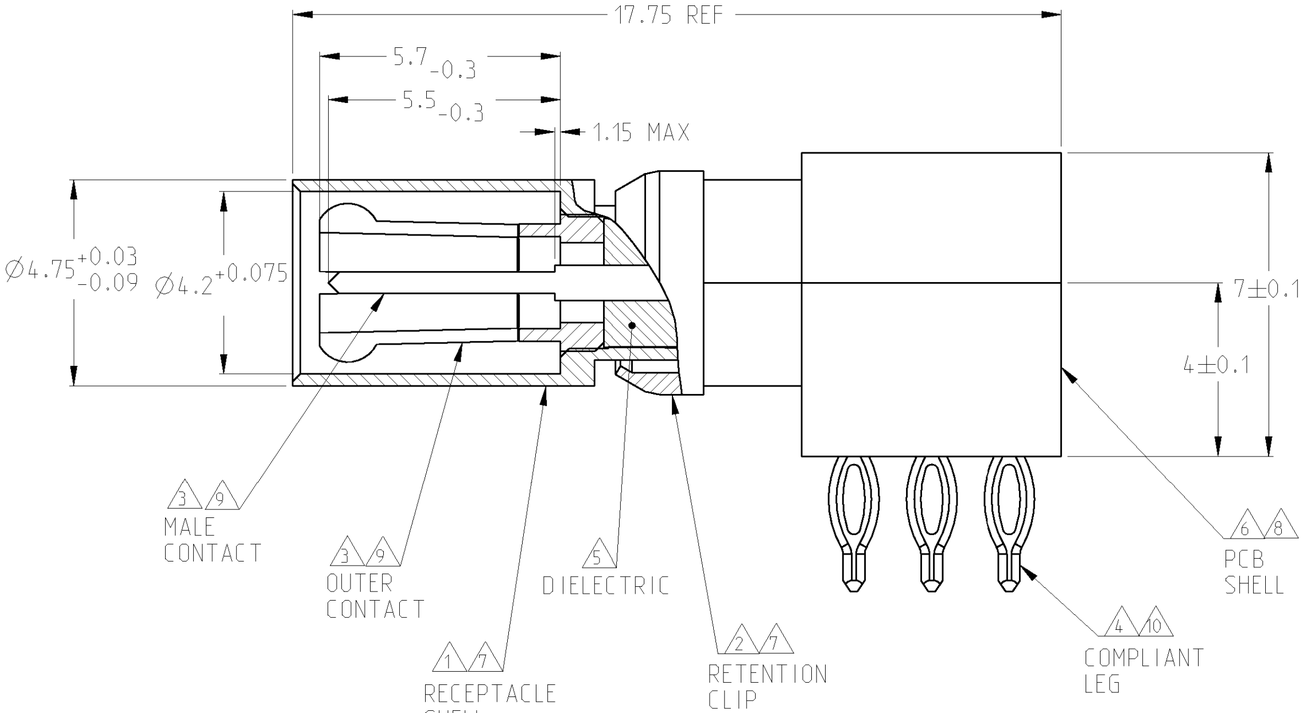

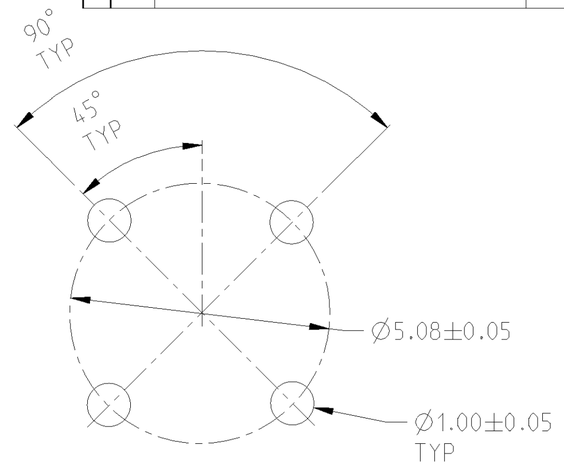

RECOMMENDED PC BOARD LAYOUT

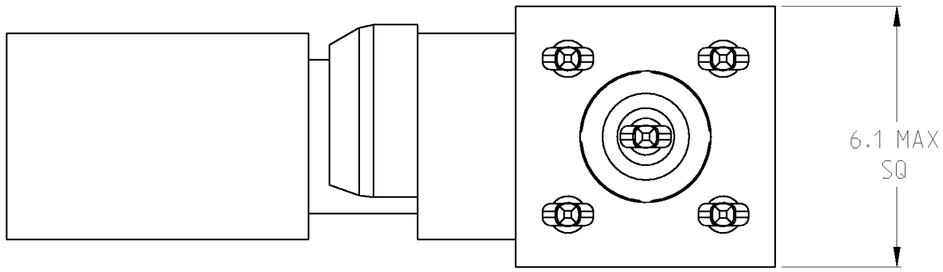

1:1

1. BRASS PER ASTM-B-16
2. BERYLLIUM COPPER PER ASTM-B-194
3. BERYLLIUM COPPER PER ASTM-B-196
4. PHOS BRONZE PER ASTM-B-103
5. POLYMETHYLPENTENE, GENERAL PURPOSE
6. ZINC PER QQ-Z-363
7. NICKEL PLATE PER QQ-N-290
8. NICKEL PLATE PER MIL-C-26074
9. GOLD PLATE PER ASTM-B488
10. TIN PLATE PER ASTM-B-545

5148386-1
PART NUMBER

THIS DRAWING IS A CONTROLLED DOCUMENT FOR TYCO ELECTRONICS CORPORATION IT IS SUBJECT TO CHANGE AND THE CONTROLLING ENGINEERING ORGANIZATION SHOULD BE CONTACTED FOR THE LATEST REVISION.

DIMENSIONS: mm

TOLERANCES UNLESS OTHERWISE SPECIFIED:
0 PLC ±
1 PLC ±
2 PLC ±
3 PLC ±
4 PLC ±
ANGLES ±

MATERIAL –
FINISH –

DWN K. WEIDNER 18FEB05
CHK K. WEIDNER 18FEB05
APVD K. WEIDNER 18FEB05
PRODUCT SPEC –
APPLICATION SPEC –
WEIGHT –

tyco Electronics
Tyco Electronics
Middletown, PA 17057

NAME PCB PIN RTANG COMPLIANT

SIZE	CAGE CODE	DRAWING NO	RESTRICTED TO
A2	00779	C-5148386	–

CUSTOMER DRAWING | SCALE 10:1 | SHEET 1 OF 1 | REV 0