Data sheet | Item number: 770-845/011-000/064-000

Socket for PCBs; angled; 5-pole; Cod. B; gray

www.wago.com/770-845/011-000/064-000

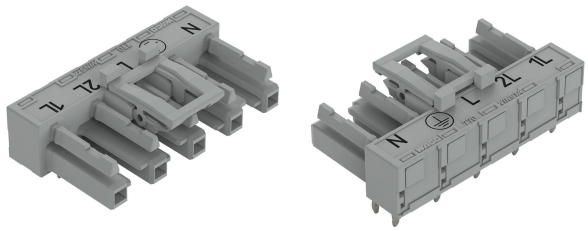

Color:

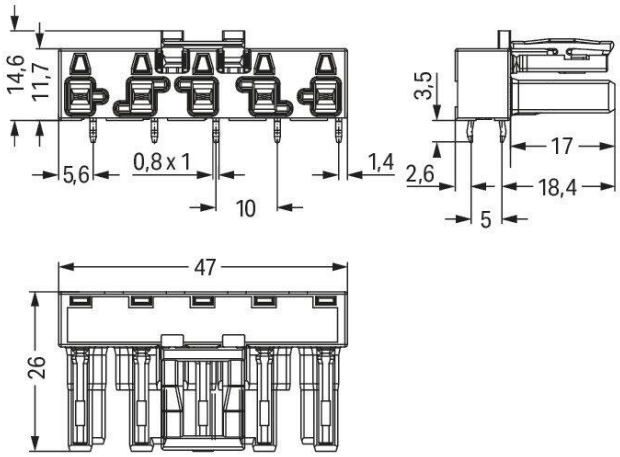

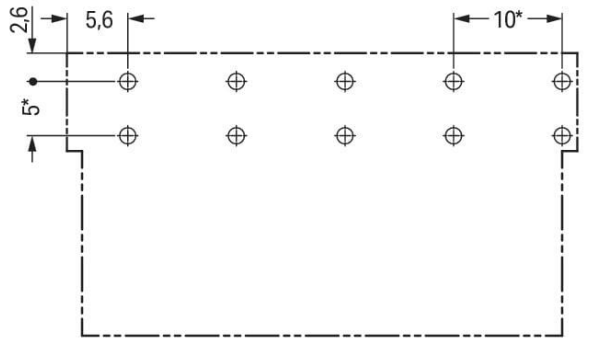

Drilled hole diameter: $1.5^{+0.1}$ mm

* ± 0.05 mm

Subject to changes. Please also observe the further product documentation!

WAGO GmbH & Co. KG
Hansastr. 27
32423 Minden
Phone: +49571 887-0 | Fax: +49571 887-169
Email: info.de@wago.com | Web: www.wago.com

Do you have any questions about our products?
We are always happy to take your call at +49 (571) 887-44222.

Item description

Female connector/socket *WINSTA*® MIDI 5-pole

WAGO has various connection solutions for any challenge in building installation, for example, the *WINSTA*® MIDI female connector/socket. Our giant selection of pluggable PCB connectors with different insertion directions and operating variants offers you the perfect solution for your application at all times. The mechanical coding and color coding of the pcb connectors ensure error-free installation of the individual components – including protection against mismating. Pcb connectors with B coding from the *WINSTA*® MIDI line are available in pink, light green, or gray, allowing you to distinguish different circuits, for example for pumps, lighting, or sun blinds. Usage-specific pole marking is possible as well. This pcb connectors can be used for a load of up to 25 A. Therefore, pcb connectors can also be used for high power loads. *WINSTA*® MIDI with Push-in CAGE CLAMP® spring pressure connection technology is found in a broad range of individual products you can use for quick, easy, flexible, and secure electrical installation.

Push-in CAGE CLAMP® spring pressure connection technology – pluggable installation instead of laborious screw connections!

The WINSTA® Pluggable Connection System allows pluggable electrical installation. This significantly reduces the need for servicing and lowers costs. Take advantage of the pluggable version of our maintenance-free spring pressure connection technology too! Plan your installation with with protection against mismating from WAGO.

-
- protection against mismating eliminates errors
- for automation controllers
- with B coding for controllers such as sun blinds and lighting fixtures
- fast, secure installation

Data
Notes

Variants:	Other pole markings Other versions (or variants) can be requested from WAGO Sales or configured at https://configurator.wago.com/.

Electrical data

Ratings per IEC/EN

Ratings per	IEC/EN 60664-1

Subject to changes. Please also observe the further product documentation!

WAGO GmbH & Co. KG
Hansastr. 27
32423 Minden
Phone: +49571 887-0 | Fax: +49571 887-169
Email: info.de@wago.com | Web: www.wago.com

Do you have any questions about our products?
We are always happy to take your call at +49 (571) 887-44222.

Nominal voltage (III/3)	400 V
Rated impulse voltage (III/3)	6 kV
Rated current	25 A
Legend (ratings)	(III / 3) ≙ Overvoltage category III / Pollution degree 3

Ratings per IEC/EN – Notes

Note (rated current)	25 A for 3-pole load 20 A for 4- and 5-pole load

Ratings per UL 1977

Note for the US market	Some versions may also be used for current interruption in accordance with the UL certificate in select applications with currents below 16 A and voltages up to 600 V. For further information, please contact your local sales office.
Rated voltage (UL 1977)	600 V
Rated current UL 1977	23 A

General information

Note on contact resistance	approx. 1 mΩ of contact resistance approx. 0.25 mΩ contact transition plug/socket

Connection data

Total number of potentials	5
Number of levels	1

Connection 1

Pole number	5

Physical data

Pin spacing	10 mm / 0.394 inches
Width	47 mm / 1.85 inches
Height	18.1 mm / 0.713 inches
Height from the surface	14.6 mm / 0.575 inches
Depth	26 mm / 1.024 inches
Solder pin length	3.5 mm
Solder pin dimensions	1 x 0.8 mm
Drilled hole diameter with tolerance	$1.5^{(-0.1 \ldots +0.1)}$ mm

Subject to changes. Please also observe the further product documentation!

WAGO GmbH & Co. KG
Hansastr. 27
32423 Minden
Phone: +49571 887-0 | Fax: +49571 887-169
Email: info.de@wago.com | Web: www.wago.com

Do you have any questions about our products?
We are always happy to take your call at +49 (571) 887-44222.

Mechanical Data

Application	Control technology
Coding	B
Variable coding	Yes
Marking	N ⏚ L 2L 1L
Potential marking	N ⏚ L 2L 1L
Mating force of a plug-in connection	approx. 20 … 70 N (depending on pole number)
Retention force of a plug-in connection	Locked: > 80 N
Unmating force of a plug-in connection	Unlocked: approx. 20 … 70 N (depending on pole number)
Number of mating cycles	200, without resistive load
Design	angled

Plug-in connection

Contact type (pluggable connector)	Female connector/socket
Connector (connection type)	for PCB
Mismating protection	Yes
Note on mismating protection	All *WINSTA*® components are 100% protected against mismating when: a.) plugging different numbers of poles b.) plugging while rotated 180 c.) plugging while laterally staggered d.) plugging one pole
Mating direction to the PCB	0 °
Locking lever	yes
Locking of plug-in connection	locking lever
Note on locking system	All connectors for mounted installations (snap-in versions for lighting fixtures or devices, all types of PCB and distribution connectors) are factory-equipped with locking levers to ensure plugs and sockets are securely locked. Additional locking levers are only required for flying leads (plug/socket).

PCB contact

PCB contact	THT
Solder pin arrangement	2 in-line solder pins/pole
Number of solder pins per potential	2

Subject to changes. Please also observe the further product documentation!

WAGO GmbH & Co. KG
Hansastr. 27
32423 Minden
Phone: +49571 887-0 | Fax: +49571 887-169
Email: info.de@wago.com | Web: www.wago.com

Do you have any questions about our products?
We are always happy to take your call at +49 (571) 887-44222.

Material data

Note (material data)	Information on material specifications can be found here
Color	gray
Insulation material	Polyamide (PA66)
Flammability class per UL94	V0
Clamping spring material	Chrome-nickel spring steel (CrNi)
Contact material	Copper or copper alloy; surface-treated
Contact plating	Tin
Fire load	0.189 MJ
Weight	10.4 g

Environmental requirements

Processing temperature	-5 … +40 °C
Continuous operating temperature	-35 … +85 °C
Note on continuous operating temperature	Insulating parts for temperatures ≤ 105 °C

Commercial data

eCl@ss 10.0	27-44-06-05
eCl@ss 9.0	27-44-06-05
ETIM 8.0	EC002560
ETIM 7.0	EC002560
ECCN	NO DATA
PU (SPU)	50 pcs
Packaging type	box
Country of origin	PL
GTIN	4050821553793
Customs tariff number	85366990990

Environmental Product Compliance

RoHS Compliance Status	Compliant,No Exemption

Approvals / Certificates

General approvals

Certificate

Subject to changes. Please also observe the further product documentation!

WAGO GmbH & Co. KG
Hansastr. 27
32423 Minden
Phone: +49571 887-0 | Fax: +49571 887-169
Email: info.de@wago.com | Web: www.wago.com

Do you have any questions about our products?
We are always happy to take your call at +49 (571) 887-44222.

Logo	Approval	Additional Approval Text	name
	cURus Underwriters Laboratories Inc.	UL 1977	E45171

Counterpart

Item no.770-255/064-000
Plug; 5-pole; Cod. B; 4,00 mm²; gray

www.wago.com/770-255/064-000

Required accessories

Cover

Cover

Item no.: 770-201
Lockout cap; 12-pole, separable; for sockets; Plastic; black

www.wago.com/770-201

Item no.: 770-221
Lockout cap; 12-pole, separable; for sockets; Plastic; white

www.wago.com/770-221

Downloads

CAD/CAE-Data

CAD data

2D/3D Models 770-845/011-000/064-000	URL	Download

PCB Design

Symbol and Footprint 770-845/011-000/064-000	URL	Download

CAx data for your PCB design, consisting of "schematic symbols and PCB footprints", allow easy integration of the WAGO component into your development environment.

Supported formats:

- Accel EDA 14 & 15
- Altium 6 to current version
- Cadence Allegro
- DesignSpark
- Eagle Libraries

Subject to changes. Please also observe the further product documentation!

WAGO GmbH & Co. KG
Hansastr. 27
32423 Minden
Phone: +49571 887-0 | Fax: +49571 887-169
Email: info.de@wago.com | Web: www.wago.com

Do you have any questions about our products?
We are always happy to take your call at +49 (571) 887-44222.

- KiCad
- Mentor Graphics BoardStation
- Mentor Graphics Design Architect
- Mentor Graphics Design Expedition 99 and 2000
- OrCAD 9.X PCB and Capture
- PADS PowerPCB 3, 3.5, 4.X, and 5.X
- PADS PowerPCB and PowerLogic 3.0
- PCAD 2000, 2001, 2002, 2004, and 2006
- Pulsonix 8.5 or newer
- STL
- 3D STEP
- TARGET 3001!
- View Logic ViewDraw
- Quadcept
- Zuken CadStar 3 and 4
- Zuken CR-5000 and CR-8000

PCB Component Libraries (EDA), PCB CAD Library Ultra Librarian

Asset Administration Shell

Asset Administration Shell 770-845/011-000/064-000	URL	Download

Environmental Product Compliance

Compliance Search

Environmental Product Compliance 770-845/011-000/064-000 Socket for PCBs; angled; 5-pole; Cod. B; gray	URL	Download

Installation Notes

Product family

WINSTA® MIDI
Show all products from the family

Subject to changes. Please also observe the further product documentation!

WAGO GmbH & Co. KG
Hansastr. 27
32423 Minden
Phone: +49571 887-0 | Fax: +49571 887-169
Email: info.de@wago.com | Web: www.wago.com

Do you have any questions about our products?
We are always happy to take your call at +49 (571) 887-44222.